REQUIRED PLANS

Provide 3 sets of plans drawn to scale, which include the following:

1. PLOT PLAN & PROJECT DATA TABLE

* location of any adjoining street, sidewalk, parkway, walkway or alley
* dimensions of property (lot size) and proposed addition
* location and uses of existing building and proposed addition
* distances from proposed addition to existing buildings and property lines
* location of all underground or overhead utilities and size of sewer
* project data table showing new & existing use, occupancy, area, stories, height, sprinklers, etc.
* dimensions of adjacent alley or walkway if there is one

2. FLOOR PLAN

* dimensions of new exterior walls, and interior partitions
* dimensions of existing adjoining rooms, and window sizes
* locations and sizes of new windows, doors, stairway and plumbing fixtures
* complete floor plan of existing building
* show all smoke detectors and carbon monoxide detectors
* location and scope of any other proposed work such as any windows and doors to be altered
* show all electrical outlets, lights, switches, fau, wall heaters, fireplaces, etc.

EXAMPLE PLOT PLAN

Proposed 225 sq. ft. Addition

℄ = Property Line
(E) = Existing
(N) = New

PROJECT DATA TABLE
(E) Use: Single Family Dwelling
(N) Use: Same
Scope of Work:
225 sq. ft. Bedroom Addition
Sprinklers: No
(E) Area: 1250 Sq. Ft.
Addition: 225 Sq. Ft.
Total: 1495 Sq. Ft.

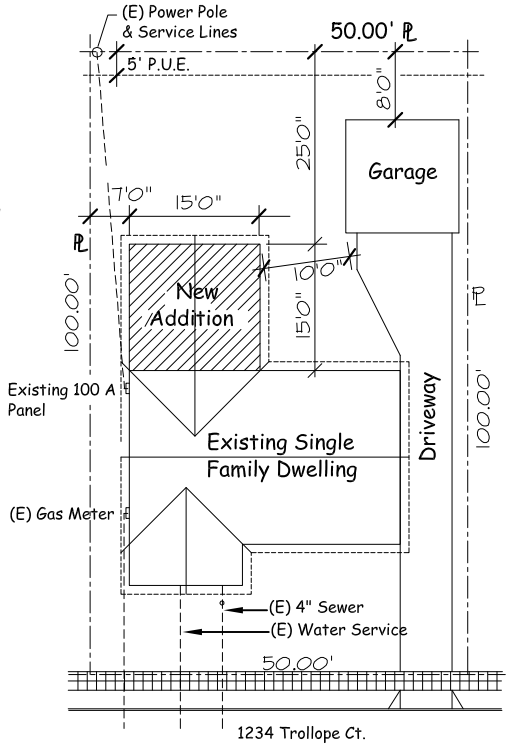

Scale =

EXAMPLE FLOOR PLAN

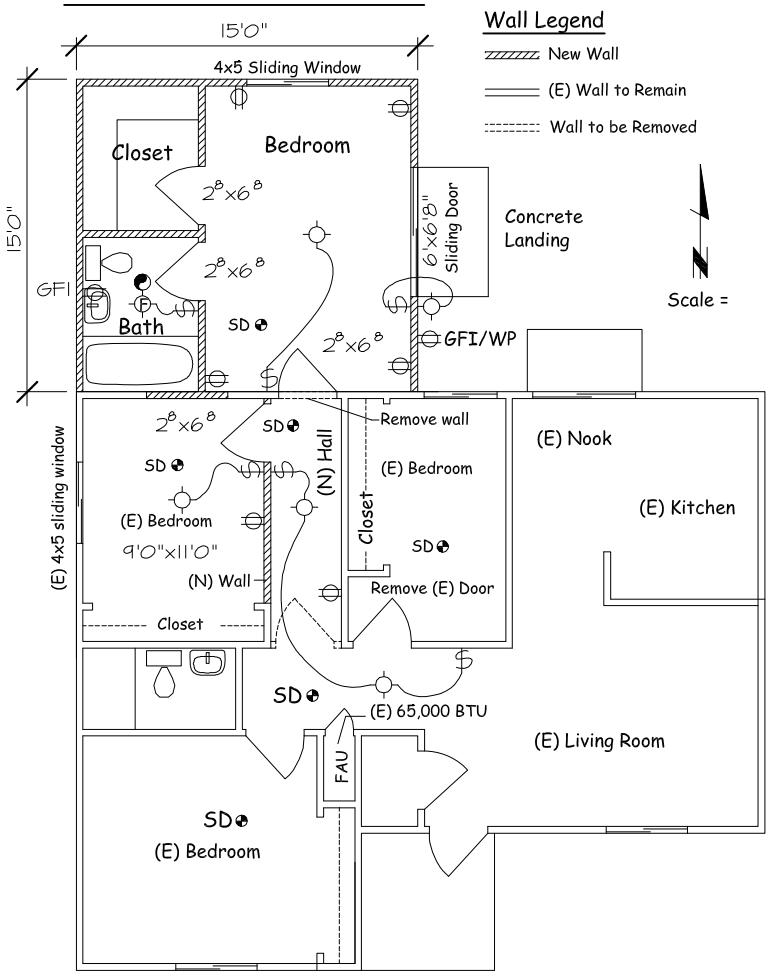

RESIDENTIAL ADDITIONS REQUIRED PLANS

HELP FOR THE HOMEOWNER
CAMARILLO BUILDING AND SAFETY

Building Official | Date

Date: 3/22/11	Sheet 1 of 4	B-250

RESIDENTIAL ADDITIONS

REQUIRED INFORMATION AND EXAMPLE PLANS
(Continued)

3. FRAMING PLAN

* types of material, locations, sizes, spans and spacing of all new structural members (ridge, sheating, roof and ceiling joists, posts etc..)
* structural connections between addition and adjoining rooms
* shear wall locations, lengths and shear wall schedule
* continuos boundary element, blocking, strapping, etc..

EXAMPLE FRAMING PLAN

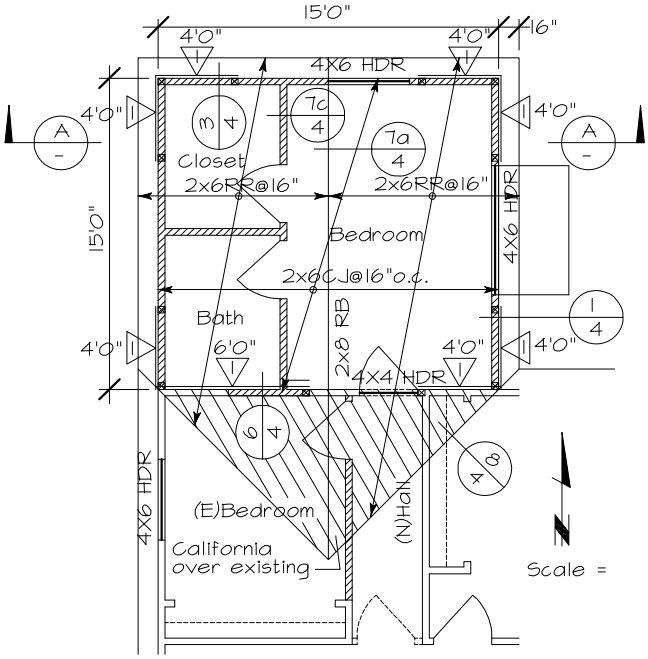

4. FOUNDATION PLAN

* slab thickness reinforcing and underlayment;
* dimensions of continuos footings, location of new piers and crawl space openings;
* sizes, spans and spacing of joist, girders, and size of sheathing (for raised floors only;)
* shear wall types and locations;
* connection of existing foundation to new foundation;
* location of any embeds including post bases, hold downs and anchor bolts.

EXAMPLE FOUNDATION PLAN

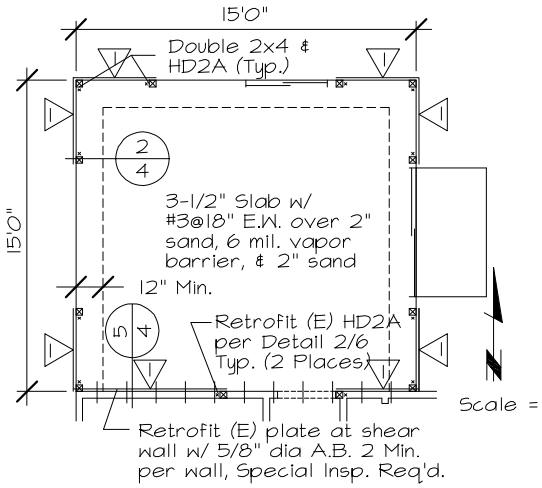

Date: 3/22/11
Sheet 2 of 4

RESIDENTIAL ADDITIONS

REQUIRED INFORMATION AND EXAMPLE PLANS
(Continued)

5. CONSTRUCTION SECTION

* ceiling height of addition
* insulation materials for wall, floor and attic, interior and exterior finish;
* sizes, spans and spacing of new structural members for roof, floor and foundation assemblies.

EXAMPLE CONSTRUCTION SECTION

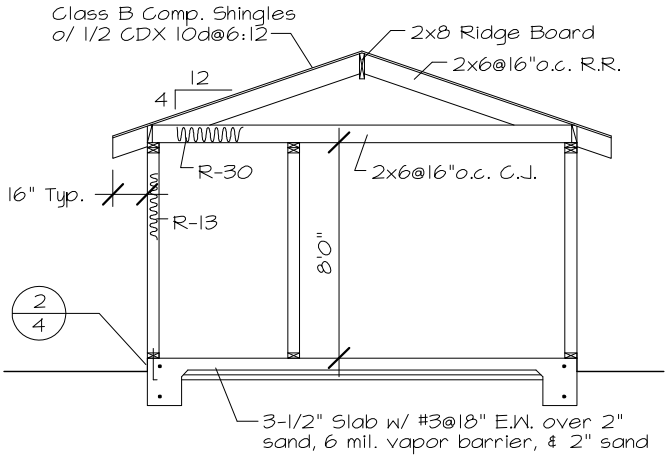

FRAMING SECTION A-A

6. ELEVATIONS

* exterior views of addition include attachment to existing;
* roofing material and pitch;
* specifications on finish materials (stucco, siding etc..);
* height of the structure measured from the average grade;
* location of new and existing windows, doors and attic ventilation openings.

EXAMPLE ELEVATIONS

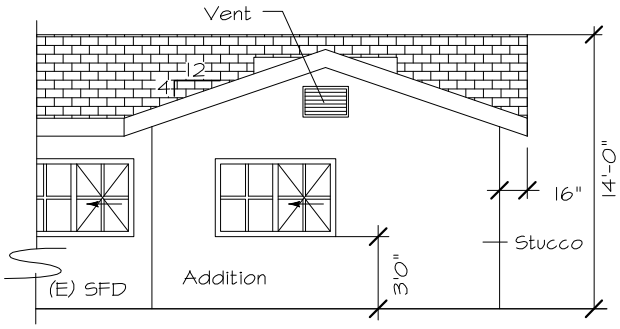

NORTH ELEVATION

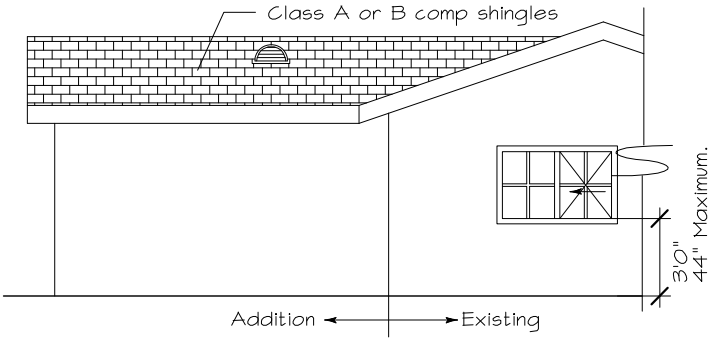

WEST ELEVATION

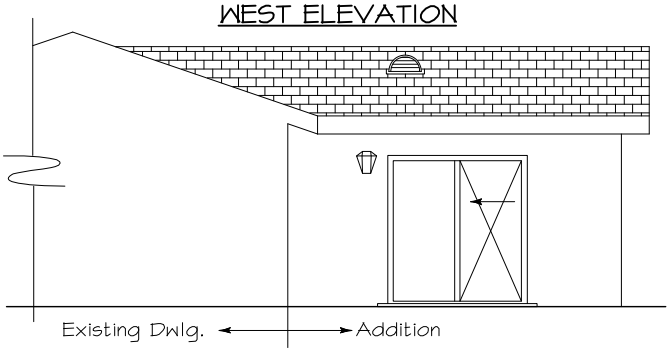

EAST ELEVATION

Date: 3/22/11
Sheet 3 of 4

RESIDENTIAL ADDITIONS

REQUIRED INFORMATION AND EXAMPLE PLANS

(Continued)

7. CONSTRUCTION DETAILS

* details showing connection of new to existing;
* foundation construction, anchor bolts, grade separation, reinforcement etc...;
* typical shear transfer details, shear wall, top plate, floor, roof, new to existing interior shear wall, shear wall to roof sheathing transfer;
* special detail such as stair framing, deck construction, ridge beam, post connections, hold down anchors, weep screed etc...

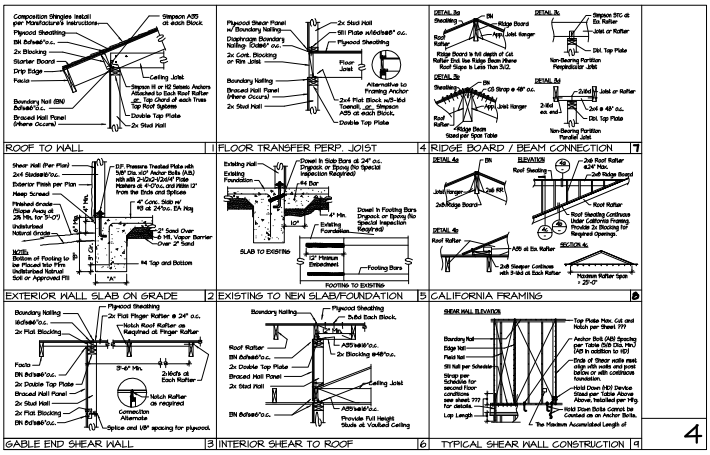

8. CONSTRUCTION NOTES

* general code information for fire life safety;
* structural specifications for the grade of building materials- lumber, steel, concrete and masonry;
* non-structural componet specifications such as piping to be used or finishes to be applied, mechanical systems, etc...;
* list any special inspections or required structural observations required;
* nailing schedules.

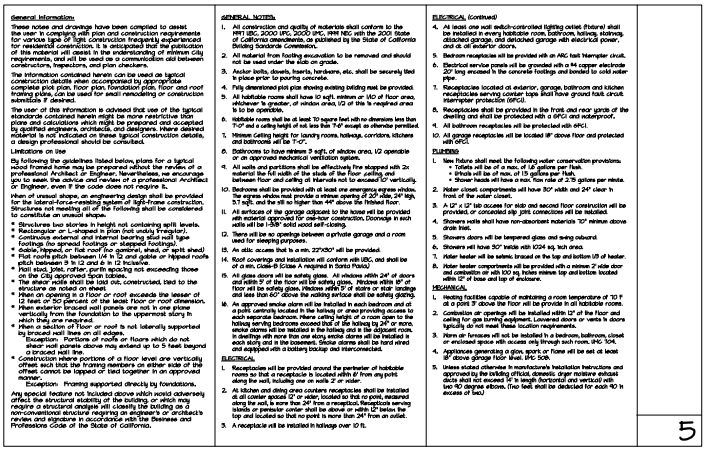

9. ENERGY CONSERVATION

* size of water heater, AC unit and heater;
* California energy compliance documentation.

10. ELECTRICAL, PLUMBING, MECHANICAL

* items must be noted and located on the plans.

REQUIRED CALCULATIONS:

1. STRUCTURAL CALCULATIONS

* Structural calculations are not required when proposed residential building complies with the conventional construction requirements of the California Residential Code. Plans may be prepared by designers, contractors and homeowners who have code and construction knowledge and experience.

2. ENERGY CALCULATIONS

* Energy calculations are required when the volume of a building has been increased. Lighting compliance is required for all installed lighting. Please review the city residential lighting compliance hanout.

Date: 3/22/11