SINGLE STORY CONVENTIONAL WOOD-FRAME CONSTRUCTION SHEET

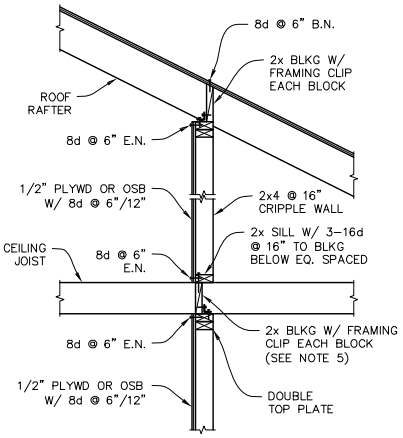

INTERIOR BRACED WALL 1

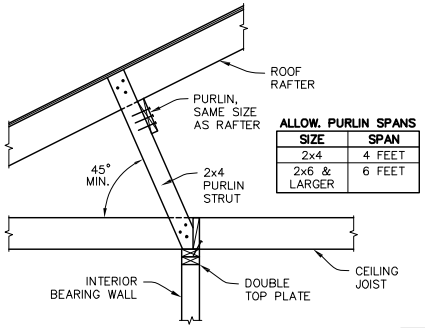

ALLOW. PURLIN SPANS

SIZE	SPAN
2x4	4 FEET
2x6 & LARGER	6 FEET

CBC 2308.10.5 PURLIN BRACING 2

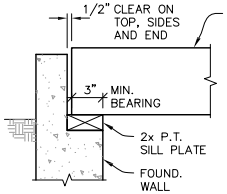

DF#1 FLOOR GIRDERS

SIZE	ALLOWABLE SPAN*	
	NON-BRG PARTITIONS	NO PARTITIONS
4x6	5'-3"	5'-8"
4x8	6'-10"	7'-4"

*MAXIMUM TRIBUTARY WIDTH = 8'-0"

NOTES:
(1) FLOOR GIRDERS SHALL BE SPACED AT 8'-0" O.C. MAX.
(2) SILL PLATE SHALL BE PRESERVATIVE-TREATED WHEN LESS THAN 8" FROM SOIL.

CBC 2304.11.2.5
CBC 2308.7 FLOOR GIRDERS 3

FRAMING CLIP AT RAFTER

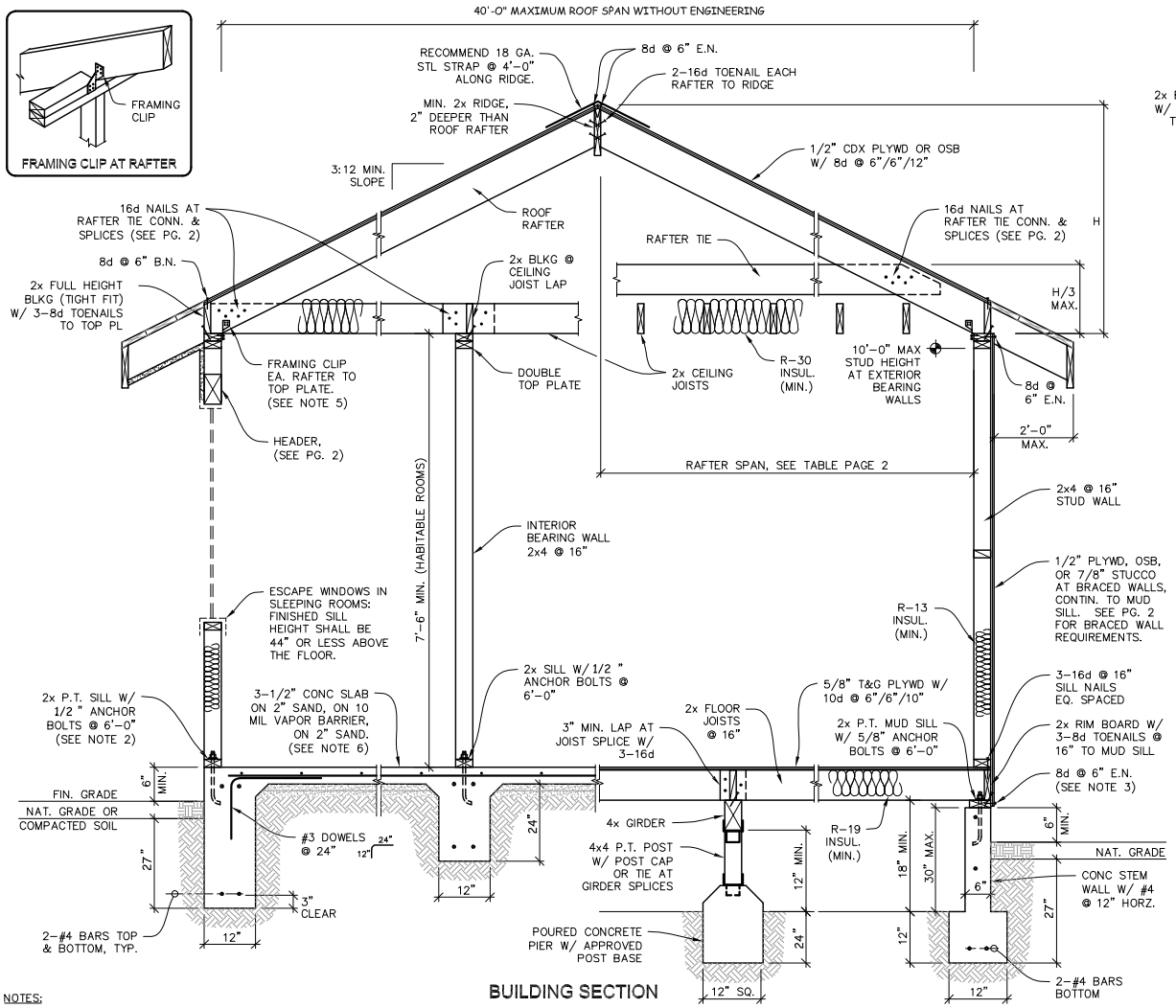

BUILDING SECTION

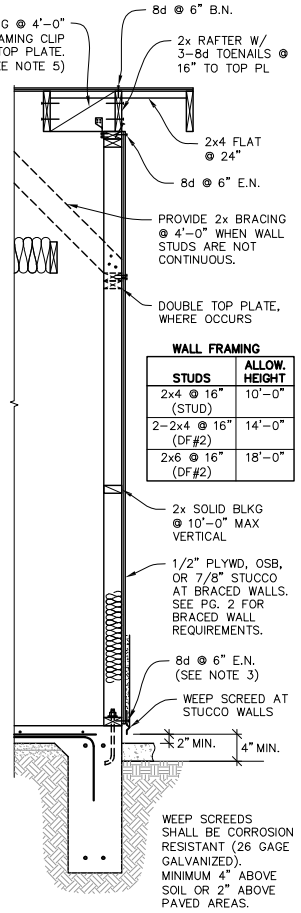

WALL FRAMING

STUDS	ALLOW. HEIGHT
2x4 @ 16" (STUD)	10'-0"
2-2x4 @ 16" (DF#2)	14'-0"
2x6 @ 16" (DF#2)	18'-0"

GABLE END WALL

NOTES:
(1) MINIMUM CONCRETE STRENGTH: 2500 psi
(2) ANCHOR BOLTS SHALL BE EMBEDDED AT LEAST 7" INTO CONCRETE. FOR TWO-POUR FOUNDATIONS, THE REQUIRED EMBEDMENT SHALL BE PROVIDED IN THE FIRST POUR. ANCHOR BOLTS SHALL BE LOCATED NOT MORE THAN 12", OR LESS THAN 4-1/2" FROM SILL PLATE ENDS, CORNERS, AND SPLICES. ANCHOR BOLTS SHALL BE INSTALLED WITH 1/4" x 3" SQUARE PLATE WASHERS.
(3) FASTENERS FOR PRESERVATIVE TREATED WOOD SHALL BE OF HOT DIPPED ZINC-COATED GALVANIZED STEEL, STAINLESS STEEL, SILICON BRONZE OR COPPER.
(4) FOUNDATIONS SHOWN ABOVE ASSUME EXPANSIVE SOILS ARE PRESENT AT THE SITE. FOUNDATION REQUIREMENTS MAY BE REDUCED WHEN JUSTIFIED BY A GEOTECHNICAL REPORT OR APPROVED BY THE BUILDING OFFICIAL.
(5) FRAMING CLIPS SHALL BE 18 GAGE STEEL WITH FOUR 8d NAILS PER LEG (EIGHT 8d NAILS PER CLIP). FRAMING CLIPS SHALL BE ICC APPROVED AND INSTALLED PER MANUFACTURER'S RECOMMENDATIONS.
(6) SLAB ON GRADE SHALL BE REINFORCED WITH #3 BARS @ 18" EACH WAY. REINFORCING SHALL BE LOCATED AT SLAB MID-HEIGHT.

THIS SHEET IS A SUMMARY OF CHAPTERS 4,5,6,7 AND 8 OF THE 2010 CRC FOR USE WITH SINGLE-STORY CONSTRUCTION ONLY. DEAD LOAD SHALL NOT EXCEED 15 PSF FOR AVERAGE ROOF AND CEILING, OR EXTERIOR WALLS OR FLOORS AND PARTITIONS. FLOOR LIVE LOAD SHALL NOT EXCEED 40 PSF. THIS SHEET IS FOR REFERENCE ONLY AND IS NOT A SUBSTITUTE FOR ACCURATE DRAWINGS PREPARED FOR EACH PROPOSED CONSTRUCTION PROJECT.

TYPE V SHEET/ LIGHT FRAME CONSTRUCTION

HELP FOR THE HOMEOWNER

CAMARILLO BUILDING & SAFETY

Building Official: Date

Date: 1/31/08	Sheet 1 of 2	B800

SINGLE STORY CONVENTIONAL WOOD-FRAME CONSTRUCTION SHEET

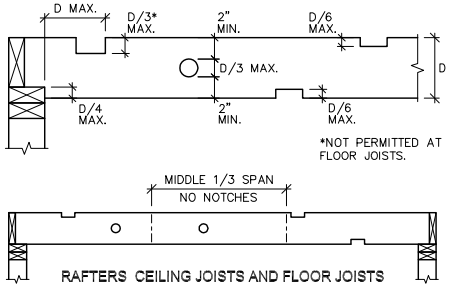

RAFTERS CEILING JOISTS AND FLOOR JOISTS

2010 CRC FIGURE R502.8

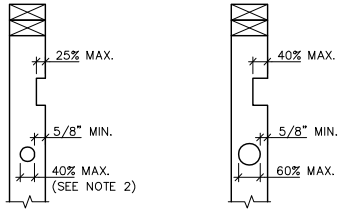

BEARING PARTITIONS & ALL EXTERIOR WALLS

NON-BEARING PARTITIONS

2010 CRC FIGURE R602.6(1)

NOTES:

(1) BORED HOLES SHALL NOT BE LOCATED AT THE SAME SECTION AS A CUT OR NOTCH.

(2) BORED HOLES IN BEARING STUDS MAY BE INCREASED TO 60% IF STUDS ARE DOUBLED; NO MORE THAN TWO SUCCESSIVE DOUBLED STUDS MAY BE BORED.

NOTCHING AND HOLES

2

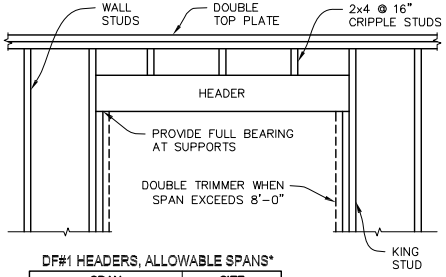

DF#1 HEADERS, ALLOWABLE SPANS*

SPAN	SIZE
UP TO 4'-0"	4x4
4'-1" TO 6'-0"	4x6
6'-1" TO 8'-0"	4x8
8'-1" TO 10'-0"	4x10
10'-1" TO 12'-0"	4x12

*MAXIMUM TRIBUTARY WIDTH = 12'-6"

HEADER/LINTEL

3

GENERAL NOTES:

(1) SEE FASTENING SCHEDULE (CBC TABLE 2304.9.1) FOR NAILING NOT SHOWN.

(2) BEARING WALLS AND BRACED WALLS REQUIRE CONTINUOUS FOOTINGS.

(3) "DF" ON THESE SHEETS REFERS TO DOUGLAS FIR-LARCH. SAWN LUMBER SHALL BE IDENTIFIED BY THE GRADE MARK OF AN APPROVED LUMBER GRADING OR INSPECTION AGENCY PER CBC SEC. 2302.1.1.

(4) "DL" AND "LL" ON THESE SHEETS INDICATES "DEAD LOAD" AND "LIVE LOAD," RESPECTIVELY.

(5) WOOD MEMBERS SHALL BE OF SUFFICIENT SIZE TO PREVENT SPLITTING DUE TO NAILING. SPLIT MEMBERS SHALL BE REMOVED AND REPLACED.

(6) "P.T." ON THESE SHEETS INDICATES PRESERVATIVE-TREATED WOOD.

(7) WHEN FRAMED WITH ENGINEERED WOOD TRUSSES, ROOF DIAPHRAGMS SHALL BE CONNECTED TO INTERIOR BRACED WALLS BY MEANS OF DRAG TRUSSES OR TRUSS BLOCKING.

DF#2 RAFTERS, ALLOWABLE SPANS*

RAFTER SPACING	DL=10 PSF, LL=20 PSF				
	2x4	2x6	2x8	2x10	2x12
12"	9'-10"	15'-6"	20'-5"	25'-8"	–
16"	8'-11"	14'-1"	18'-2"	22'-3"	25'-9"
24"	7'-10"	11'-9"	14'-10"	18'-2"	21'-0"

* **DATA TAKEN FROM 2010 CRC TABLE R802.5.1(2)**

DF#2 CEILING JOISTS, ALLOWABLE SPANS*

JOIST SPACING	ATTICS WITHOUT STORAGE, LL=10 PSF				ATTICS WITH LIMITED STORAGE, LL=20 PSF			
	2x4	2x6	2x8	2x10	2x4	2x6	2x8	2x10
12"	12'-5"	19'-6"	25'-8"	–	9'-10"	14'-10"	18'-9"	22'-11"
16"	11'-3"	17'-8"	23'-0"	–	8'-9"	12'-10"	16'-3"	19'-10"
24"	9'-10"	14'-10"	18'-9"	22'-11"	7'-2"	10'-6"	13'-3"	16'-3"

*DATA FROM **2010 CRC TABLE R802.4(1)** ATTICS WITH STORAGE ARE THOSE WHERE THE CLEAR HEIGHT BETWEEN THE CEILING JOIST AND RAFTER IS 42" OR GREATER. ATTICS SHALL BE UNINHABITABLE. CEILING DEAD LOAD SHALL NOT EXCEED 5 PSF.

RAFTER TIE CONNECTIONS, # 16d COMMON NAILS, SEE NOTE (5)*

TIE SPACING	ROOF PITCH																	
	3:12			4:12			5:12			7:12			9:12			12:12		
	SPAN			SPAN			SPAN			SPAN			SPAN			SPAN		
	12'	20'	25'	12'	20'	25'	12'	20'	25'	12'	20'	25'	12'	20'	25'	12'	20'	25'
12"	3	4	5	3	3	4	3	3	3	3	3	3	3	3	3	3	3	3
16"	4	6	7	3	4	5	3	3	4	3	3	3	3	3	3	3	3	3
24"	5	8	10	4	6	8	3	5	6	3	4	5	3	3	4	3	3	3
32"	7	11	13	5	8	10	4	7	8	3	5	6	3	4	5	3	3	4
48"	10	16	19	7	12	15	6	10	12	4	7	9	4	6	7	3	4	5

* **TABLE R802.5.1(9)** VALUES ADJUSTED FOR DF#2 FRAMING. THE NUMBER OF NAILS SPECIFIED IN THE TABLE SHALL BE PROVIDED AT EACH CONNECTION. WHEN FULL-HEIGHT INTERIOR BEARING WALLS OR PURLIN BRACING ARE PROVIDED, RAFTER TIE NAILING MAY BE REDUCED PROPORTIONAL TO THE REDUCTION IN RAFTER SPAN; NO LESS THAN 3 NAILS SHALL BE PROVIDED AT EACH CONNECTION. NO SNOW LOAD.

DF#2 FLOOR JOISTS, ALLOWABLE SPANS*

JOIST SPACING	DL=10 PSF, LL=40 PSF			
	2x6	2x8	2x10	2x12
12"	10'-9"	14'-2"	17'-9"	20'-7"
16"	9'-9"	12'-7"	15'-5"	17'-10"
24"	8'-1"	10'-3"	12'-7"	14'-7"

* **DATA TAKEN FROM 2010 CRC TABLE R502.3.1(1)**

PLYWOOD OR OSB FLOOR AND ROOF SHEATHING, ALLOWABLE SPANS*

SHEATHING GRADES		ROOF				FLOOR
		MAX. SPAN (in.)		LOADS (psf.)		PANEL EDGES WITH T&G JOINTS OR BLOCKING MAX. SPAN (in.)
SPAN RATING FLOOR/ROOF	SPAN THICKNESS	WITH EDGE SUPPORT	WITHOUT EDGE SUPPORT	TOTAL LOAD	LIVE LOAD	
24/0	7/16, 1/2	24	20	40	**30**	0
24/16	7/16, 1/2	24	24	50	**40**	16
32/16	15/32, 1/2, 5/8	32	28	40	**30**	16
40/20	19/32, 5/8, 3/4, 7/8	40	32	40	30	20
48/24	23/32, 3/4, 7/8	48	36	45	**35**	24

*DATA FROM **2010 CRC TABLE R503.2.1.1(1)** SHEATHING PANELS SHALL BE CONTINUOUS OVER TWO OR MORE SPANS AND PERPENDICULAR TO SUPPORTS. FOR 1/2" SHEATHING, MAXIMUM SPAN SHALL BE 24". EDGE SUPPORT MAY BE PROVIDED BY TONGUE AND GROOVE EDGES, 2X BLOCKING, OR PANEL EDGE CLIPS.

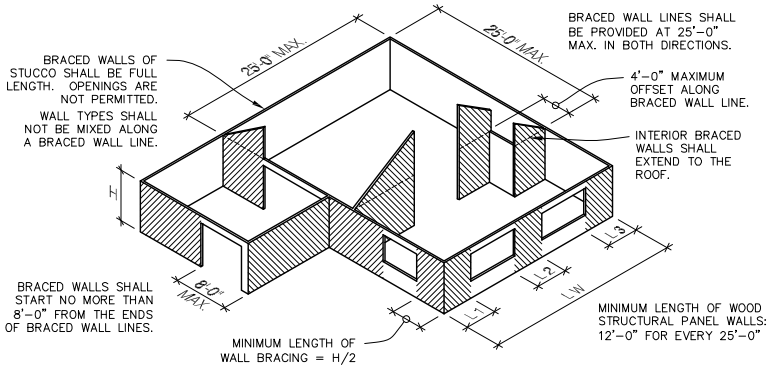

BASIC COMPONENTS OF THE LATERAL BRACING SYSTEM

1

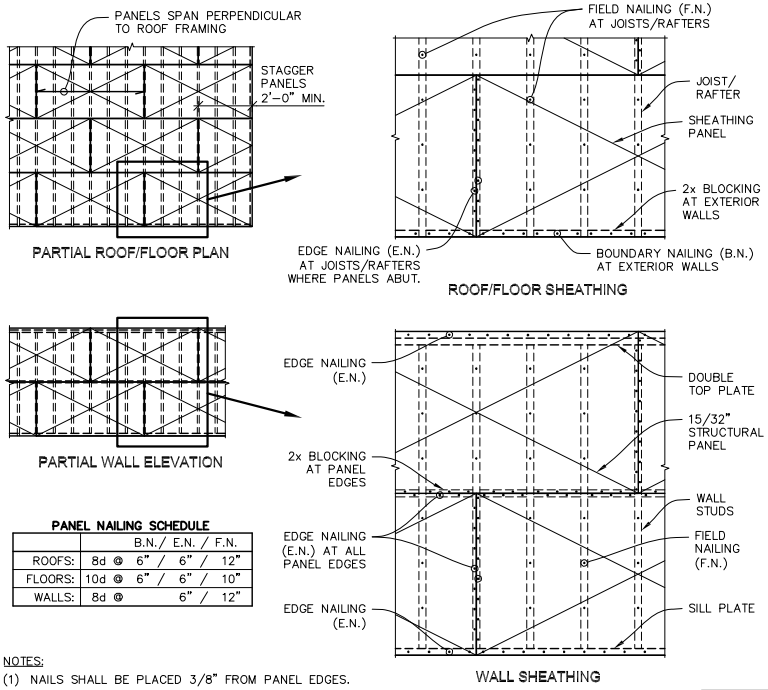

PANEL NAILING SCHEDULE

	B.N. / E.N. / F.N.
ROOFS:	8d @ 6" / 6" / 12"
FLOORS:	10d @ 6" / 6" / 10"
WALLS:	8d @ 6" / 12"

NOTES:

(1) NAILS SHALL BE PLACED 3/8" FROM PANEL EDGES.

(2) PROVIDE 1/8" GAP BETWEEN SHEATHING PANELS.

(3) MINIMUM DIMENSION OF SHEATHING PANEL IN ANY DIRECTION SHALL BE 2'-0"

(4) WALL SHEATHING PANELS MAY BE INSTALLED WITH THE LONG DIRECTION ORIENTED VERTICALLY.