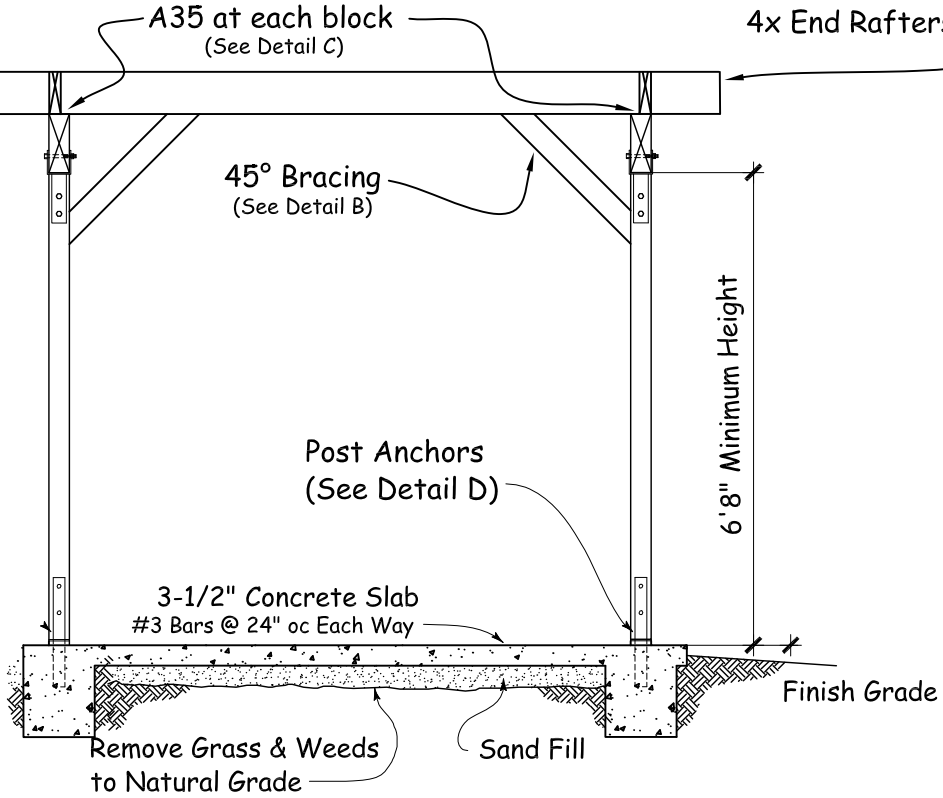

CONSTRUCTION SECTION

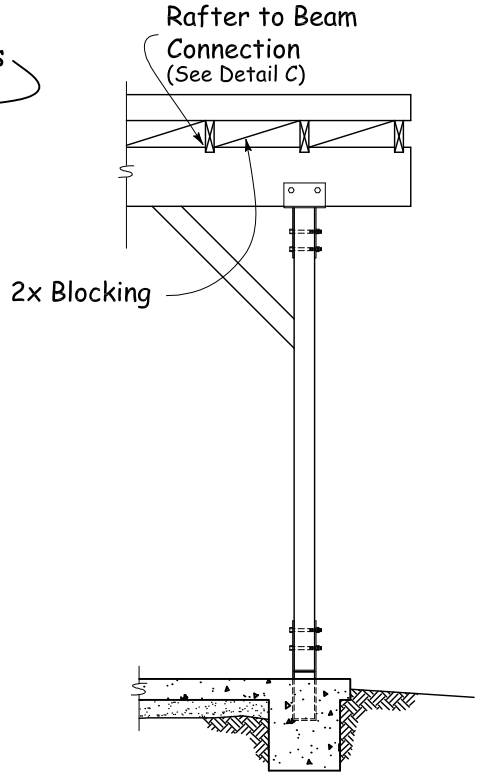

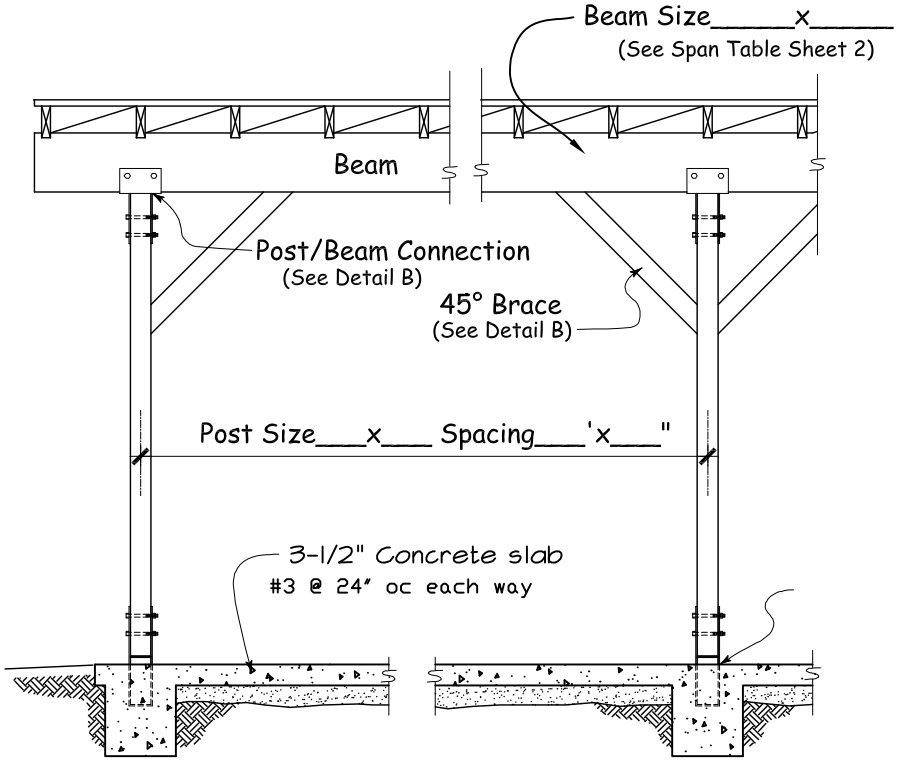

ELEVATION

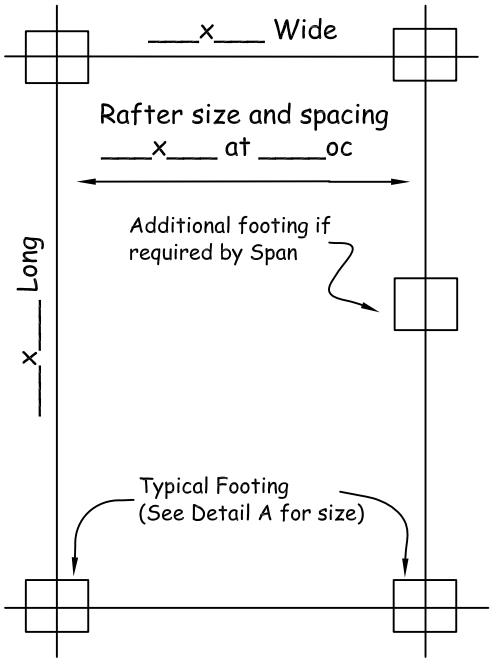

FOOTING PLAN

DETACHED PATIO COVER

HELP FOR THE HOMEOWNER
CAMARILLO BUILDING AND SAFETY

FOOTING

Building Official | Date

Date: 3/22/11 | Sheet 1 of 4 | B818

Footing Size Table

Footing Size	Max. Supported Roof Area
12" square	34 sq. ft.
16" square	60 sq. ft.
20" square	96 sq. ft.
24" square	140 sq. ft.

DETAIL A

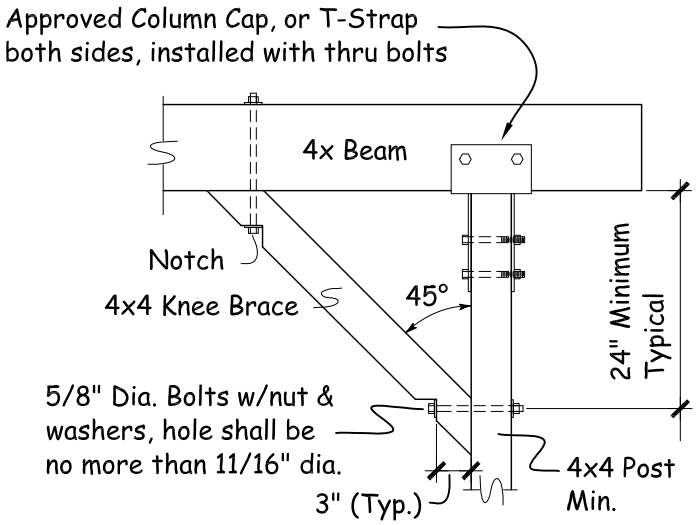

DETAIL B

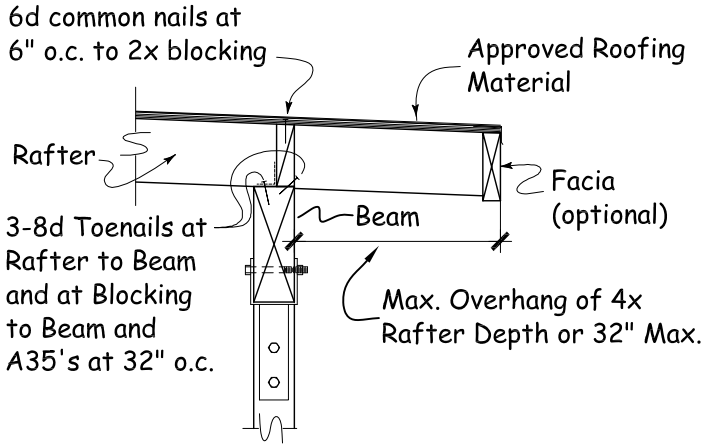

DETAIL C

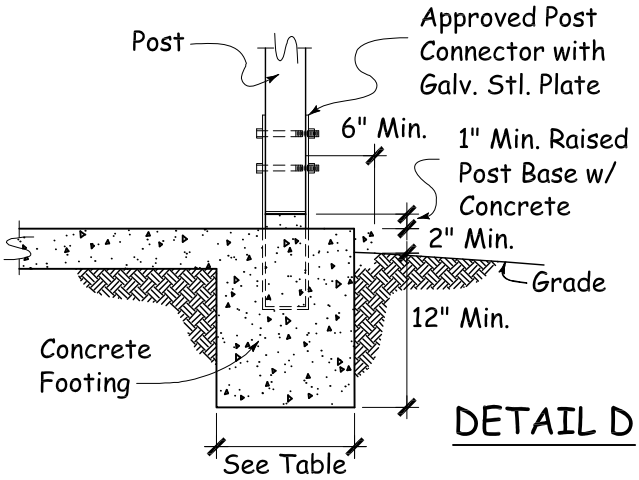

DETAIL D

RAFTER SPANS (DFL #2)

Rafter Size	Rafter Spacing 12"	16"	24"	32"	48"
2x4	7'-9"	7'-1"	6'-2"		
2x6	12'-3"	11'-1"	9'-3"	8'-0"	6'-6"
2x8	16'-2"	14'-8"	11'-8"	10'-2"	8'-3"
2x10	20'-0"	18'-9"	14'-4"	12'-5"	10'-1"
2x12	20'-0"	20'-0"	16'-7"	14'-4"	11'-9"
4x6	16'-3"	14'-9"	12'-11"	11'-6"	10'-0"
4x8	20'-0"	19'-5"	17'-0"	15'-3"	12'-8"
4x10		20'-0"	20'-0"	18'-11"	15'-5"
4x12				20'-0"	17'-11"
4x14					20'-0"

Loading: DL=16 psf. (Roofing Material-6 psf max.)
LL=20 psf

Loading assumes 3/4" ply for spans <24" oc and 2x decking for spans >24". Other designs are possible but evidence must be submitted to establish their adequacy. No stucco finishes or roofing material exceeding 6 psf allowed without engineering. Footing bearing pressures account for load duration and allowable bearing pressure of 1000 psf.

BEAM SPANS or COLUMN SPACING (DFL #1)

See illustration below for area calculation

Rafter Span	Beam Span 4x6	4x8	4x10	4x12	4x14	4x16	6x8	6x10	6x12	6x14
8'	10'-5"	13'-9"	16'-9"	19'-7"	20'-0"		16'-7"	20'-0"		
10'	9'-8"	12'-4"	15'-1"	17'-6"	19'-7"	20'-0"	15'-4"	18'-6"	20'-0"	
12'	8'-11"	11'-3"	13'-9"	16'-0"	17'-10"	20'-0"	14'-0"	16'-9"	19'-5"	
14'	8'-3"	10'-5"	12'-9"	14'-9"	16'-6"	19'-0"	12'-11"	15'-8"	18'-0"	20'-0"
16'	7'-8"	9'-9"	11'-11"	13'-9"	15'-5"	17'-10"	12'-1"	14'-8"	16'-10"	19'-9"
18'	7'-3"	9'-2"	11'-3"	13'-0"	14'-7"	16'-9"	11'-5"	13'-9"	15'-9"	18'-7"
20'	6'-11"	8'-9"	10'-8"	12'-4"	13'-10"	15'-11"	10'-9"	13'-1"	15'-0"	17'-8"

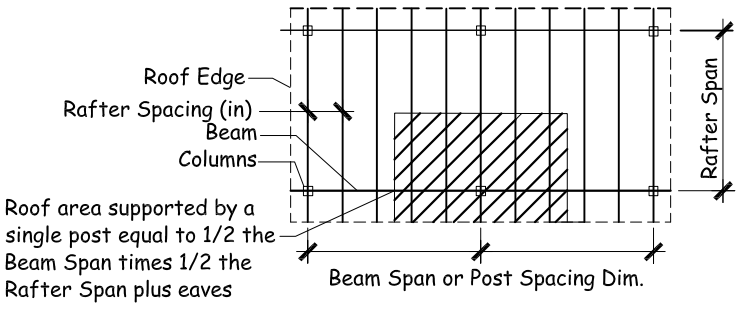

INSTRUCTIONS:

1. A building permit for a patio cover may be obtained using these City standard drawings. Simply fill in the blanks and information requested on these plans.
2. Draw a plot plan (instructions can be found on the City's "Sample Plot/Site Plan" handout,) and bring three copies of the completed drawing to Building and Safety where it can be reviewed for Building and Zoning Code requirements a permit issued.
3. Deviations from the construction and designs shown in these drawings will require complete plans and details and must be reviewed by a plan check engineer prior to obtaining a building permit.

GENERAL NOTES

1. A patio cover is a one story structure that does not exceed 12 feet in height above the adjacent grade.
2. Patio covers shall be used for recreational, outdoor living purposes only and shall not be used as carports, garages, storage rooms or habitable rooms.
3. Longer side and one additional side of the patio shall be 65% open, below 6'8" above the floor. Openings may be enclosed with insect screening or readily removable plastic (translucent or transparent) up to 1/8-inch thick. Framed windows are not permitted.
4. One hour fire wall reouired when exterior face of post/wall is located less than 5'0" from the property line.
5. Unless a licensed engineer or architect provides structural calculations to justify it, no patio cover/ structure will attach to or rely upon the existing rafter tails or roof projection for the purpose of supporting the new structure.
6. Patio covers are for outdoor living only. Use of these structures as habitable space requires a building permit and alterations to both the patio cover and the house, to comply with code requirements. Conversions may require upgrades to your foundation system, roof framing, electrical, fire life safety and many other items. Also you may need to provide a vapor barrier under slab, a reinforced slab and footing, new wall bracing, heating, electrical outlets, energy forms, and insulation insulation for the space to be converted.
7. These drawings are examples of the way an open patio cover may be installed. Other methods may be used provided they are approved by this Department prior to installation. All material types and sizes are subjected to the approval of this Department.
8. Post may be supported on a 3-1/2" thick reinforced concrete slab on grade when posts support a combined live and dead load less than 750 pounds per column. Approved connector between post and concrete slab shall be capable to withstand uplift wind forces.

TYPICAL ABBREVIATIONS:

Conc.	= Concrete	DL	= Dead Load
Conn.	= Connection	LL	= Live Load
DFL	= Douglas Fir Larch	psf	= Pounds per Square Foot
Dia.	= Diameter	psi	= Pounds per Square Inch
Dim.	= Dimension	o.c.	= on center (spacing)
Ga.	= Gauge	stl.	= Steel
Galv.	= Galvanized	>	= Greater Than

REQUIRED INSPECTIONS:

1. FIRST INSPECTION: shall be after excavation for the footing (before any concrete is poured) and verification of the solid wood backing for the ledger bolting.
2. SECOND INSPECTION: shall be the framing inspection when all framing has been completed. The roof sheathing and nailing will be inspected at this time.
3. THIRD INSPECTION: will be the final inspection after the roof covering has been installed.

CONSTRUCTION NOTES

1. Roof Covering shall be Class B or better fire retardant. Rafters shall be sized based on the table shown on page 2. Patio covers utilizing this sheet shall have roofing assemblies weighing less than 6 psf, including asphalt or fiberglass shingles, cap sheets, built-up roofs, hot mopped assemblies and some light weight tile roofs. Use of heavy weight roofs including concrete, clay or slate tile or stucco soffits require calculations and plans by a licensed engineer.
2. Rafters shall be marked Douglas Fir Grade #2 or better, Beams shall be marked Douglas Fir Grade #1 or better.
3. Concrete shall have a minimum strength of 2500 psi in 28 days.
4. Framing hardware shall be ICC approved for the intended use and installed per manufacturer's specifications using all recommended fasteners.
5. Roof Sheathing shall be continuous over 2 or more rafter spans, face grain shall be perpendicular to supports and maximum span shall be as follows:

SHEATHING	SPAN RATING	MAX. SPAN	NAILING
3/8" CDX Plywood	20/0	16" o.c.	6d common or deformed shank
1/2" CDX Plywood	24/0	24" o.c.	6d common or deformed shank
5/8" CDX Plywood	40/20	32" o.c.	8d common or deformed shank
3/4" CDX Plywood	48/24	36" o.c.	8d common or deformed shank
1-1/8" CDX Plywood	60/48	48" o.c.	10d common or deformed shank
1x nominal lumber		24" o.c.	2-8d at each lap
2x Decking		48" o.c.	2-16d at each rafter

(all nail spacing for plywood sheathing shall be 6" on center (o.c.) at edges and 12 on center field)