CITY OF CAMARILLO
WATER DIVISION

AMENDMENT No. 2 TO THE STANDARD SPECIFICATIONS
REVISED JULY 2005

A. Provisions contained in this document amend the "City of Camarillo Water Division Standard Specifications" (**CWDSS**), 2005 edition.

W-35 Change "J&R CONCRETE PRODUCTS No. V4-T" to "BINGHAM & TAYLOR" (SEE ATTACHMENT #1)

Review By:

Richard Nack
Senior Civil Engineer

Rick Dierksen
Water Superintendent

10/23/2014
Lucia McGovern
Deputy Director Public Works,
Environmental

Approved: 11/12/14
Naftalia Tucker, P.E.
City Engineer RCE No. 50878

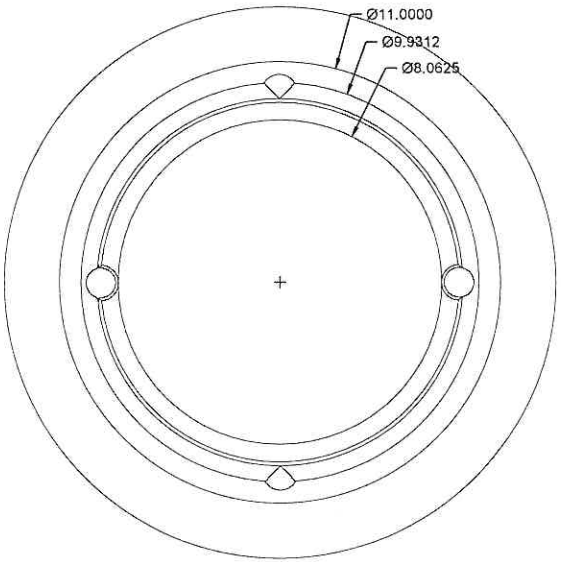

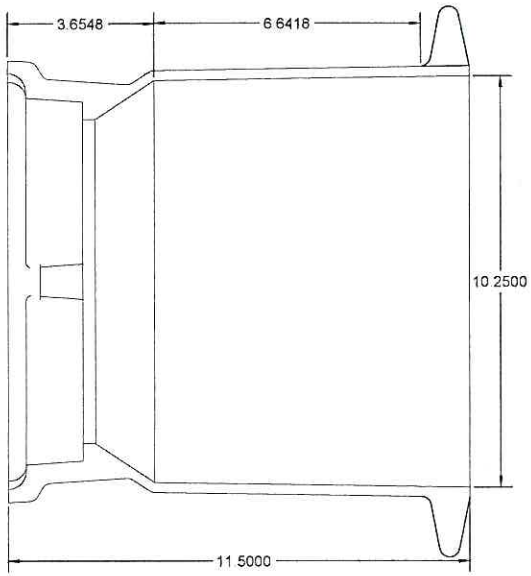

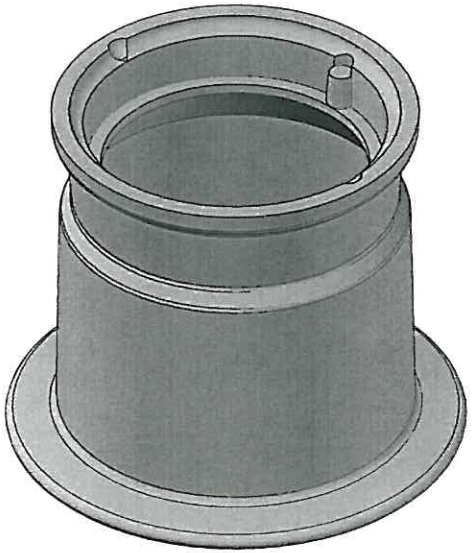

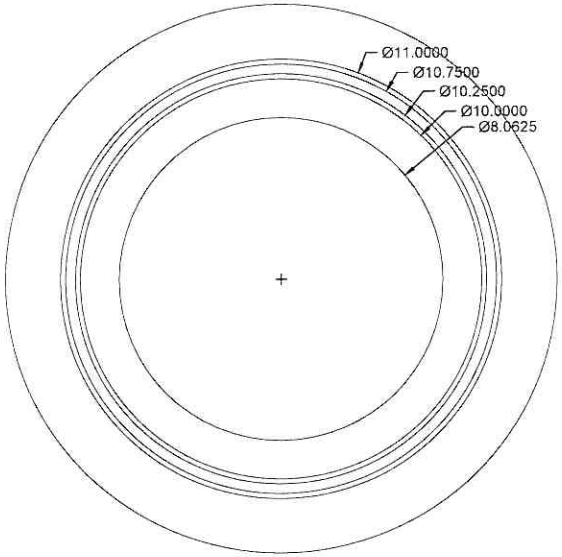

NOTES- ALL EDGES HAVE A 1/16 RADIUS
TOLERANCE ± .0625

REV	DATE	COMMENT
A		RELEASED

Bingham & Taylor

BINGHAM & TAYLOR

CUL10RHVYF

10in Heavy Mark V Rim FLANGE

DRAWN BY D.REED 3/20/13

WEIGHT lbs

APPROVED BY

DATE

ATTACHMENT #1

DATE: OCTOBER 2014