CAMARILLO SANITARY DISTRICT

STANDARD SPECIFICATIONS

REVISED MARCH 2015

CAMARILLO SANITARY DISTRICT
CAMARILLO, CALIFORNIA
(A Subsidiary District of the City of Camarillo)

MANUAL OF STANDARD SPECIFICATIONS

DESIGN AND CONSTRUCTION STANDARDS

DISTRICT OFFICE
601 CARMEN DRIVE
CAMARILLO, CALIFORNIA 93010
TELEPHONE: 805-388-5340

Revision 03/26/2015

Note: Owner of this Standard Specification book is responsible for its continual updating

TABLE OF CONTENTS

SECTION 1 GENERAL PROVISIONS 1
1.0 General Requirements 1
1.0.1 Scope 1
1.0.2 Interpretation 1
1.0.3 Uniform Plumbing Code 1
1.1 Enforcement 2
1.2 Definitions 2
1.3 Abbreviations 5
1.4 Plan Preparation Guidelines 6
SECTION 2 DESIGN CRITERIA 7
2.0 Standard Requirements 7
2.0.1 Calculations Required 7
2.1 Sewer Capacities and Sizes 7
2.1.1 Hydraulic Design 7
2.1.1.1 Average Dry Weather Flow Rates 7
2.1.1.2 Peak Dry Weather Flow Rates 9
2.1.1.3 Peak Wet Weather Flow Rates 9
2.1.2 Minimum Main Gravity Sewer Size 9
2.1.3 Minimum Building Sewer Size for Residential Area 9
2.1.4 Minimum Building Sewer Size for Commercial and Industrial Buildings 10
2.1.5 Oversizing and Extra Depth 10
2.1.6 Forcemains 10
2.1.7 Minimum and Maximum Sewer Main Slopes 10
2.1.7.1 Minimum Sewer Main Slopes 10
2.1.7.2 Maximum Sewer Main Slopes 11
2.1.7.3 Substandard Sewer Main Slopes 11
2.2 Sewer Location 11
2.2.1 Standard Location and Alignment 11
2.2.1.1 Stationing Procedure 11
2.2.1.2 Main Sewers 12
2.2.1.3 Building Sewers (Service Laterals) 12
2.2.2 Easements 13
2.2.2.1 Minimum Width 14
2.2.2.2 Lot Lines 14

2.2.2.3 Placement of Pipe within Easement 14
2.2.3 Future Extensions 15
2.2.4 Alignment 15
2.2.5 Separation of Water and Sewer Pipes 15
2.3 Depth of Sewers 15
2.3.1 Basic Requirement 15
2.3.2 Standard Depths 15
2.3.3 Exceptions 16
2.4 Sewer Pipe Material 16
2.5 Structures 17
2.5.0 Concrete 18
2.5.1 Manholes 18
2.5.1.1 Locations 18
2.5.1.2 Design 19
2.5.1.3 Lined Manholes 20
2.5.1.4 Drop Manholes 20
2.5.1.5 Manhole Covers 20
2.5.1.6 Odor Control 21
2.5.1.7 Protection 21
2.5.2 Cleanouts 22
2.5.3 Grease, Sand, and Oil Interceptors and Sampling/Monitoring Manholes 22
2.6 Existing Sewer 22
2.6.1 Connections 22
2.6.2 Cesspools, Seepage Pits or Septic Tanks 23
2.7 Backflow Devices 23
2.8 Private Sewer Systems 23
2.9 Private Residential Sanitary Lift Stations 24
2.9.0 General 24
SECTION 3 INSTALLATION 25
3.0 Installation Requirements 25
3.0.1 Pipe Bedding, Trench Backfill and Roadway Repair 25
3.0.2 Trench Subgrade 25
3.0.3 Pipe Bedding 25
3.0.4 Pipe Slope 25
3.0.5 Pipe Zone 25

3.0.6 Tracer Wire for Non-Metallic Pressure Pipelines 26
3.0.7 Trench Backfill 26
3.0.8 Overexcavation 26
3.0.9 Ground Water 26
3.0.10 Compaction Testing 27
3.0.11 Abandonment of Pipes and Appurtenances 27
3.0.12 Trenchless Reconstruction of Building Sewers 27
3.0.13. Jacking and Boring Steel Casing and Installation of Carrier Pipe 32
SECTION 4 INSPECTION AND TESTING 36
4.0 Sewers 36
4.0.1 General 36
4.0.2 Testing and Final Acceptability of Material 36
4.0.3 CCTV Inspection 36
4.0.4 Gravity Pipe Leakage Tests 37
4.0.5 Deflection Test for Plastic Pipe and Fittings 37
4.0.6 Forcemain Pipe Leakage Tests 37
4.0.7 Manhole Leakage Tests 38
SECTION 5 STANDARD NOTES 39
SECTION 6 SANITARY PUMP STATIONS 41
6.0 General Requirements 41
6.0.1 Standards and Codes 41
6.0.2 Design Flows and Heads 42
6.0.3 Drivers 43
6.0.4 Wet Well 43
6.0.5 Emergency Storage 44
6.0.6 Valve Vault 45
6.0.7 Standby Equipment 45
6.0.8 Pump Requirements 46
6.0.8.1 Recessed Impeller Centrifugal Pumps 46
6.0.8.2 Screw-Centrifugal Pumps 47
6.0.9 Valves and Gates 49
6.0.9.1 Sluice Gates 49
6.0.9.2 Eccentric Plug Valves 49
6.0.9.3 Ball Valves 50
6.0.9.4 Check Valves 50
6.0.9.5 Sewage Surge Relief Valves 51

6.0.9.6 Sewage Air Release Valves....51
6.0.10 Potable Water Backflow Prevention/Cross Connection Control....52
6.0.11 Magnetic Flow Meters....52
6.0.12 Piping and Support System....53
6.0.12.1 Piping....53
6.0.12.2 Pipe Support Systems....54
6.0.13 Ancillary Equipment....55
6.0.13.1 Ventilation, Air Conditioning, and Odor Control Systems....55
6.0.13.2 Wet Well Ventilation....55
6.0.13.3 Odor Control....56
6.0.13.4 Equipment Room and Valve Vault Ventilation....56
6.0.13.5 Fire Protection System....57
6.0.13.6 Compressed Air System....57
6.0.13.7 Hydraulic System....57
6.0.13.8 Noise Control....57
6.0.13.9 Sump Pumps....58
6.0.13.10 Spare Parts....59
6.0.14 Electrical Equipment....59
6.0.14.1 Power Supply....59
6.0.14.2 Motor Control Centers (MCC)....59
6.0.14.3 Electrical Cables and Conduits....60
6.0.15 Instrumentation and Controls....60
6.0.15.1 Pump Control System....60
6.0.15.2 Telemetry....63
6.0.15.3 Remote Station Hardware and Software....65
6.0.15.4 Communication....66
6.0.16 SCADA Software....66
6.0.17 SCADA Modifications....68
6.0.18 Pressure Gauges....68
6.0.19 Pump Station Facility....68
6.0.20 Forcemains....69
6.0.21 Access Roads....70
6.0.22 Flood Control....70
6.0.23 Grading and Area Drainage....70
6.0.24 Soils Report....70
6.0.25 Surveying....70
6.0.26 Security....71

6.0.27 Water Supply System 71
6.0.28 Landscaping and Irrigation System 71
6.0.29 Construction 71
6.0.30 Shop Drawing Submittal and Shop Drawing Review 71
6.0.31 Equipment Installation and Testing 71
6.0.32 Operation and Maintenance Manual 72
6.0.33 Operator Training 72

LIST OF TABLES

Table 2-1 Unit Flow Factors 8
Table 2-1.1 Minimum Sewer Main Slopes 11
Table 2-2 Minimum Horizontal Radius of Curvature 15
Table 2-4 Sewer Pipe Material 17
Table 2-5.1 Manhole Size 19
Table 2-5.2 Manhole Depth Requirements 19

STANDARD PLATE DRAWINGS

Manhole ..... Plate 1
Manhole Shaft J ..... Plate 2
Flat Top Manhole Under 5' Depth ..... Plate 3
Drop Manhole with Cleanout ..... Plate 4
VCP and Concrete Base Connection ..... Plate 5
PVC Pipe and Concrete Base Connection ..... Plate 6
Sampling/Monitoring Manhole (Palmer Bowlus Flume) ..... Plate 7
Manhole Frame and Cover ..... Plate 8
Manhole Opening Orientation ..... Plate 9
Existing Manhole Connection ..... Plate 10
Abandonment of Existing Manhole ..... Plate 11
Pipe Bedding ..... Plate 12
Maximum Allowable Depth to Invert ..... Plate 13
Pipe and Concrete Encasement (Type A, B, &C) ..... Plate 14
Service Lateral ..... Plate 15
Lateral Cleanout ..... Plate 16
Steep Service Lateral ..... Plate 17
Cut In Wye Connection ..... Plate 18

Concrete Slope Anchors ..... Plate 19
Gravity Pipe Field Closure ..... Plate 20
Sewer Backflow Device ..... Plate 21
Steel Casing ..... Plate 22
Utility Trench Repair within Existing Pavement Area ..... Plate 23
Pipe Wall Penetration Seal ..... Plate 24
Water and Sewer Separation ..... Plate 25
Sand & Oil Interceptors ..... Plate 26
Grease Interceptors ..... Plate 27
R. V. Dump Station ..... Plate 28
Residential Sanitary Lift Station ..... Plate 29

CAMARILLO SANITARY DISTRICT
CAMARILLO, CA
STANDARD SPECIFICATIONS

SECTION 1 GENERAL PROVISIONS

The intent of the Standard Specifications Design and Construction Standards herein referred as "Sewer Standards" is to describe a complete work of improvement which applicant, hereon referred as "CONTRACTOR", shall perform or cause to be performed in a manner acceptable to the City Engineer and in full compliance with all codes and the terms of the Sewer Standards. Contractor shall complete a functional or operable improvement or facility, even though the Sewer Standards may not specifically call out all items of work required for the Contractor to complete the tasks, incidental appurtenances, materials, and the like. If any omissions are made of information necessary to carry out the full intent and meaning of the Sewer Standards, Contractor shall immediately seek approval of the City Engineer for furnishing detailed instructions. In the event of any doubt or question regarding the true meaning of any of the sewer standards or any portion thereof, reference shall be made to the City Engineer whose decision thereon shall be final.

1.0 General Requirements

1.0.1 Scope

The design and construction of sanitary sewers and sewage treatment plants within the boundaries of the Camarillo Sanitary District shall be in accordance with good engineering practice. The work shall comply with these standards, except where specific modifications have been approved in writing by the City Engineer.

1.0.2 Interpretation

The City Engineer shall decide all questions of interpretation of "good engineering practice" being guided by:

- "Gravity Sanitary Sewer Design and Construction" (ASCE Manual of Engineering Practice 60/ WEF Manual of Practice FD-5)
- "Existing Sewer Evaluation and Rehabilitation" (ASCE Manuals and Reports on Engineering Practice 62/WEF Manual of Practice FD-6)
- "Design of Municipal Wastewater Treatment Plants" (WEF Manual of Practice. 8)
- "Standard Specifications for Public Works Construction" (The "Greenbook", currently adopted version, written and promulgated by Public Works Standards, Inc.)

1.0.3 Uniform Plumbing Code

All work on building sewers inside and outside of public rights of way or sewer easements will be governed by the provisions of the Uniform Plumbing Code (UPC) and as amended by the requirements of the Camarillo Sanitary District.

1.1 Enforcement

Provisions of these sewer standards shall be enforced by the City Engineer or her/his designee.

1.2 Definitions

Wherever any of the following words, expressions, or pronouns are used in these specifications, they shall be understood to have the meanings given below:

Board or District Board:

Is the governing body of said District.

Board Member or Director:

Is any elected officer of said District.

Building Sewer (service lateral):

The building sewer is that part of the horizontal piping of a sanitary sewer drainage system which extends from the end of the building drain (two (2) feet outside the building wall) and which receives the discharge of the building drain and conveys it to a public sewer, private sewer, individual sewage disposal system, or other point of disposal. Roof runoff, air conditioning condensate, and storm runoff shall **not** be discharged to the sanitary sewer drainage system. Building sewers shall be considered private from the main sewer wye to the building.

Camarillo Sanitary District:

The Camarillo Sanitary District, County of Ventura, State of California, a subsidiary district of the City of Camarillo (referred herein as the District).

County:

The County of Ventura, State of California.

City Engineer:

The person appointed by the Manager to enforce the rules, regulations, codes, specifications and standards as required by the ordinances, resolutions and policies of the Camarillo Sanitary District.

Food Service Establishment:

A facility discharging kitchen or food preparation wastewaters such as restaurants, motel, hotels, cafeterias, delicatessen, meat cutting-preparation, bakeries, hospitals, schools, bars, or any other facility which, in the District's discretion, would require a grease trap or grease interceptor installation by virtue of its operation.

Grease, Sand and Oil Interceptor/Grease Trap:

A device utilized to effect the separation of fats, oils, and grease (FOG) in wastewater effluent from a Food Service Establishment. Such traps or interceptors may be of the "outdoor" or underground type 750 gallon capacity or more, or the "under-the-counter" package units which are typically less than 100 gallon capacity. For the purpose of this definition, the words "trap" and "interceptor" are used interchangeably.

Inspector:

Means the Inspector authorized by the Board of Directors and/or the City Engineer to perform all inspection duties.

Interference:

The inhibition or disruption of the wastewater treatment processes or operations, acts, or discharges which may cause damage to any portion of the Sewerage System or which contribute to a violation of any requirement of the District's NPDES Permit or Statewide General Waste Discharge Requirements (Order 2006-0003). The term includes Interference with sewage sludge use or disposal in accordance with State or Federal criteria, guidelines or regulations or any State or Federal sludge management plan applicable to the method of disposal or use employed by the Sewerage System.

Main Sewer:

A sewer designated to accommodate more than one lateral sewer.

Manager:

The person appointed by the Board of Directors to administer and enforce the ordinances, resolutions and policies of the Camarillo Sanitary District.

Owner's or Developer's Engineer:

Civil Engineer registered in the State of California employed by owner or developer who is solely responsible for the complete and technically accurate application of these Sewer Standards to the project plans and specifications.

Reference to Standards and Publications:

Any reference made in these Camarillo Sanitary District Standard Specifications or on the drawings to any specifications, standard methods or publications or any scientific or technical society or other organization shall, in the absence of a specific designation to the contrary, be understood to refer to the specification, standard method, or publication in effect on the date the work is approved.

Residence:

Shall include the following types of dwelling units: Single Family Detached, Condominium, Townhouse, Apartment, Mobile Home, and each unit of a Multi-Family structure (i.e., Duplex, Triplex).

Sewer Standards:

Refers to the current Camarillo Sanitary District Standard Specifications.

Service Center:

Facilities described as, but not limited to, car washes; motor vehicle, boat or airplane storage yards; gasoline and diesel service stations; repair garages or any similar facility which may introduce sand, inert solids, oil (of a petroleum origin), flammable liquids or any other similar substances.

1.3 Abbreviations

The following abbreviations are included as part of this manual:

ABS	Acrylonitrile Butadiene Styrene
AC	Asphalt Concrete
ACP	Asbestos Cement Pipe
ANSI	American National Standard
APWA	American Public Works Association
ASTM	American Society for Testing and Materials
ASCE	American Society of Civil Engineers
AWWA	American Water Works Association
BFP	Backflow Preventer
CO	Clean Out
CPC	California Plumbing Code
CPD	Commercial Planned Development
CCTV	Closed Circuit Television
DIP	Ductile Iron Pipe
FOG	Fats, Oils, and Grease
FRP	Fiberglass Reinforced Plastic
GIS	Geographical Information System
HMWPE	High Molecular Weight Polyethylene
ID	Inside Diameter
IPD	Industrial Planned Development
MCC	Motor Control Center
MH	Manhole
NAD	North American Datum
NFPA	National Fire Protection Association
NPDES	National Pollutant Discharge Elimination Permit System
NPT	National Pipe Thread
OD	Outside Diameter
OSHA	Occupational Safety and Health Administration
PB	Polybutylene
PE	Polyethylene
PLC	Programmable Logic Controller
PVC	Polyvinyl Chloride (Minimum SDR 26 ASTM D3034)
RPD	Residential Planned Development
SDR	Standard Dimension Ratio
SI	International System of Units
SSPWC	Standard Specification for Public Works Construction
TEFC	Totally Enclosed, Fan Cooled
UPC	Uniform Plumbing Code
USGS	United States Geological Survey
VCP	Vitrified Clay Pipe
VFD	Variable Frequency Drive
WEF	Water Environment Federation

1.4 Plan Preparation Guidelines

Drawing Format:

Drawings shall be 24" x 36". Originals to be ink on four (4) mil Mylar, have an engineering scale of 1" = 40' minimum horizontal, 1" = 4' vertical for slopes less than 10 percent and 1" = 8' for slopes greater than ten (10) percent. "Cut and paste" or stickybacks" shall **not** be allowed on final originals.

Drawing Content:

Plans shall include the Standard City Title Sheet. Sheets shall include signature blocks for City Engineer, Water Reclamation Superintendent and the design engineer(s) (with signatures, stamps, expiration dates), North arrow with graphic scale, elevation datum, vicinity map and sheet index.

Plans shall show sewer facilities in plan and profile (invert and soffit lines) and shall include, but not be limited to, finished surface over sewer, invert elevations, top or bottom of pipe elevations at conflicts, manholes with rim elevations, pipe slopes, cleanouts, wyes and laterals, pipe size and material, bedding load factor, easements, record information, other utilities, utility crossings, and general notes.

Elevations shall be determined by bench marks based on State Plane, California Zone V, NAD 27 datum, units in feet.

As-Built Drawings

The actual location and grade of all sewers shall be accurately determined during and after construction and shall be recorded on "As Built" plans. Accurate location and elevations of all main sewers, lateral sewers, manholes, cleanouts, lift stations and other sewer appurtenants shall also be recorded on the "As Built" plans.

The "As Built" plans shall be certified as being correct by the developer's engineer. The certified "As Built" plans will be reviewed by the District. Should the certified "As Built" plans be found to be inaccurate, they shall be rejected and returned to the developer's engineer.

The original "As Built" plan shall be filed with the District for storing in the Department of Public Works vault, after they have been accepted by the District.

SECTION 2 DESIGN CRITERIA

2.0 Standard Requirements

The design and construction of all sanitary sewer system facilities to be operated and maintained by the Camarillo Sanitary District shall be in accordance with these Design Criteria, and the latest edition of the following:

- The Camarillo Sanitary District Standard Specifications, latest edition
- The City of Camarillo Public Works Department Standard Plans, latest edition
- Standard Specifications for Public Works Construction (SSPWC, Greenbook), currently adopted version
- Camarillo Sanitary District's Sewer System Management Plan,
- Statewide General Waste Discharge Requirements issued by the State Water Resources Control Board
- Requirements of the jurisdictional agencies where the work shall be performed
- Cal-OSHA requirements

2.0.1 Calculations Required

Substantiating engineering calculations for design flows, pipe size, pump, motor, generator, wet well size and appurtenant equipment selection, structural design, and bedding/backfill designs shall accompany plan submittals to the District. All calculations shall be sealed and signed by a California registered professional engineer.

Where flow from a new development or redevelopment is added to an existing sewer, and where the new development or redevelopment is in an area of questionable sewer capacity, the existing sewer shall be flow monitored by a qualified company acceptable to the District at the owner's cost for a minimum period of two weeks to verify the existing minimum, average, and peak dry weather flows. Two (2) copies of the report shall be submitted to the District in the District's required format. The District will determine the adequacy of capacity in all the facilities that will convey the subject flow.

2.1 Sewer Capacities and Sizes

2.1.1 Hydraulic Design

Pipe size, flow quantity, and hydraulic slope relationships shall be computed using:

VCP (Extra Strength) - Use Manning's "n" = 0.013 for hydraulic design.

PVC (SDR 26) - Use Manning's "n" = 0.012 for hydraulic design.

2.1.1.1 Average Dry Weather Flow Rates

The average dry weather flow (Q_{adw}) rates for sewers shall be calculated using the unit flow factors contained in Table 2.1 and the tributary land uses. Where

appropriate, and when required by the Camarillo Sanitary District, the unit flow factors shall be evaluated by the design engineer based upon the specific land uses and densities proposed for new development or redevelopment.

Table 2-1

Unit Flow Factors

Zoning Category	Zoning Use Description	Density (DU/Ac)	Ultimate Unit Flow Factor (GPD/AC)
Residential Use			
R-E, RE10AC, RE-15, RE-1AC, RE-20, RE- 3AC, RE40AC, RE-5AC	Rural Exclusive	1-2.5	200
R-1, R-1-10, R-1-15, R-1-8, RPD, RPD-2U, RPD-3U, RPD-4U, RPD-5U	Low Density Residential	1-5	1,350
RPD7R, RPD8U, RPD10U	Low-Medium Density Residential	6-10	1,500
RPD12U, RPD15U, RPD17U, RPD18U	Medium Density Residential	11-18	1,700
RPD-20U, RPD24U, RPD25U, RPD30U	High Density Residential	19-30	1,900
MHPD	Mobile Home Park Development	1-7	820
Commercial Uses			
COT	Camarillo Old Town		880
CPD	Commercial Planned Development		880
SC	Service Commercial Zone		880
P-O	Professional Office		880
Restaurant	Restaurant		1,500
Carwash	Carwash		6,000
Hotel	Hotel		3,000
Industrial Uses			
L-M	Limited Manufacturing		440
M-1	Light Manufacturing		440
M-2	Heavy Manufacturing		880
Public Uses			
Public	Public Facilities		880
School	School		1,200
Hospital	Hospital		2,800
Other Uses			
A-E	Agricultural		0*
O-S	Open Space		0
Park	Park		200

* Special Study Required

2.1.1.2 Peak Dry Weather Flow Rates

The peak dry weather flow (Q_{pdw}) in cubic feet per second (cfs) shall be determined from Q_{adw} in cfs based upon the following equation:

$$Q_{pdw}=a\ Q_{adw}^{\ b}$$

Coefficients a and b shall be based upon a minimum of two weeks of flow monitoring where the tributary flow from a new development or redevelopment is added to an existing sewer. Where such information is not available, the following equation shall be used to determine the peak dry weather flow:

$$Q_{pdw}=2.1\ Q_{adw}^{\ 0.92}$$

The peak dry weather flow rate in pipes 15-inches and smaller will be limited by the calculated depth to pipe diameter ratio of d/D = 0.5; and 18-inches and larger d/D = 0.62.

The determination of the peak dry weather flow shall also consider other factors such as pumped flows and large sewer flow generators.

2.1.1.3 Peak Wet Weather Flow Rates

The peak wet weather flow (Q_{pww}) shall be based upon recorded historical information where available and applicable. Otherwise, the peak wet weather flow shall be calculated utilizing the following formula:

$$Q_{pww}=1.4\ Q_{pdw}$$

Peak wet weather flow shall be limited by the calculated depth to pipe ratio d/D=0.80.

2.1.2 Minimum Main Gravity Sewer Size

Minimum sewer main size shall be eight (8) inch except that six (6) inch pipe may be used where all of the following conditions are met:

A. Maximum total length is two hundred (200) feet regardless of the number of manholes.

B. There is no possibility of extension.

C. Not more than ten (10) residential laterals contribute to the six (6) inch portion.

D. Size change to six (6) inch shall only occur at a manhole.

2.1.3 Minimum Building Sewer Size for Residential Area

The minimum size of any building sewer shall be as follows:

A. The minimum size of line shall be four (4) inches to serve a maximum of one (1) residence.

B. The minimum size of line shall be six (6) inches when two (2) to ten (10) residences are served.

C. The minimum size of line shall be eight (8) inches when eleven (11) or more residences are served.

2.1.4 Minimum Building Sewer Size for Commercial and Industrial Buildings

The minimum size of any building sewer for Commercial and/or Industrial buildings shall be six (6) inches.

2.1.5 Oversizing and Extra Depth

Oversizing and extra depth of main sewers will be required where such sewers can logically serve an upstream tributary area.

2.1.6 Forcemains

The design of a sewer forcemain shall be as described in Section 6.0.20.

2.1.7 Minimum and Maximum Sewer Main Slopes

Sewer pipes shall have a constant slope between the upstream and downstream manhole of each reach. Any reach of sewer containing sags of any amount shall be removed and reconstructed at the design slope at no cost to the District. The total cost of inspection, administration, and retesting of improperly installed sewers shall be borne by the Contractor. The District shall **not** accept any sewer that does not meet these requirements. There shall be no exception to the proper slope requirement.

Sewers laid on ground slopes 3:1 or steeper, which are not under pavements, shall be anchored in place and protected by collars from erosion as per Camarillo Sanitary District Standard Plate 19, *Concrete Slope Anchors*, or as approved by the City Engineer.

2.1.7.1 Minimum Sewer Main Slopes

All sewer mains shall be designed and constructed to provide a mean velocity of not less than two (2) feet per second (fps) when flowing at the estimated average dry weather flow, as calculated using the criteria set forth in Subsection 2.1.1. Subject to the velocity limitations contained in this subsection, the slope shall equal or exceed those set forth in Table 2.1.1.

Table 2-1.1

Minimum Sewer Main Slopes

Pipe Diameter (in)	Minimum Slope (ft/ft)
4	0.02
6	0.02
8	0.0040
10	0.0028
12	0.0022
14	0.0020
15 - 18	0.0016
20 - 36	0.0012

2.1.7.2 Maximum Sewer Main Slopes

The maximum allowable slope shall be the slope which generates a maximum flow velocity of six (6) fps at peak dry weather flow rate in Vitrified Clay Pipe (VCP) and five (5) fps in Polyvinyl Chloride Pipe (PVC) as calculated using the criteria set forth in Subsection 2.1.1.

2.1.7.3 Substandard Sewer Main Slopes

Slopes below the minimum slopes may be used in order to avoid pumping only upon specific written approval of the City Engineer. Such approval shall be solicited at the beginning of the preliminary design stage (refer to Section 2.4 for substandard sewer slope materials).

2.2 Sewer Location

Sewer pipes and structures shall be protected from damage and shall be constructed so as not to endanger adjacent pipes or structures.

2.2.1 Standard Location and Alignment

2.2.1.1 Stationing Procedure

Centerline stations for sewers shall be shown on the plans. Sewer centerline stations shall be independent of street stationing. All manholes shall be numbered and the numbers noted on the plans (example: MH #1). Sewer

stations shall start at 1+00.00 at the downstream point of connection and increase upstream to the last manhole on a sewer line.

Intersecting sewer lines will be independently stationed from their downstream point of connection and increase upstream to the last manhole. Each line shall be independently labeled for identification as "Sewer Line A", "Sewer Line B", etc.

Stationing for building sewers shall be shown on the main line sewer plan and profile, including its connection point station on the sewer main.

2.2.1.2 Main Sewers

The centerline of the main sewers shall be located in public streets parallel with and six (6) feet south or east of the street centerline. In major, primary and secondary highways with raised medians, the sewer main shall be located in the center of the driving lane nearest to the center of the street, but shall **not** be located in the median strip or parking lane. Any deviation from the standard location and alignment shall only be done with prior written approval of the City Engineer.

All-weather access roads capable of accommodating all required construction and maintenance equipment shall be provided for all sewers not located within a paved street.

In curved streets, gravity sewer mains shall be constructed in straight reaches between manholes. In no case shall the outside of the sewer pipe be closer than four (4) feet to the closest curb face.

The sewer main pipe shall be placed on the opposite side of the street centerline of the potable water line, but not less than 10-feet apart. Refer to Subsection 2.2.5, Separation of Water and Sewer Pipes.

2.2.1.3 Building Sewers (Service Laterals)

Building sewers between the main sewer line (wye) and the property being served by the lateral are owned by the property owner and **not** by the District. Therefore, the property owner shall be responsible for all maintenance and repairs of service laterals.

Building sewers shall be constructed in general conformity with Camarillo Sanitary District Standard Plate 15, *Service Lateral*, and there shall be a separate lateral for each individual building.

Minimum Slope:

Laterals shall have a minimum slope of two (2) percent.

Locations:

Laterals shall be located at the center of each lot and shall be constructed perpendicular or radial to the property line. If the developer must install a sewer lateral at a location other than in the center of a lot due to unavoidable interference, the improvement plans shall indicate the mainline station of the lateral on the sewer and show the distance from a property corner. If riser is not

built, plug lateral at property line with plastic cap or plastic stopper with joint coupling and Stainless Steel (S.S.) bands.

In no case shall a sewer lateral be located within twelve (12) feet of a property corner. For cleanouts on laterals, refer to Subsection 2.5.2 and Camarillo Sanitary District Standard Plate 15, *Service Lateral*, and Standard Plate 16, *Lateral Cleanout*.

Permanent Markings:

Permanent visible markings shall be set to indicate the locations of all sewer laterals. A three (3) inch high, 3/16-inch deep "S" shall be chiseled in face of curb where the lateral crosses under the curb or on the edge of alleys without curbs. The method used shall be indicated on the plans. A licensed Civil Engineer or Land Surveyor shall verify locations of set markings.

Abandonment:

When demolition of a building takes place, remove a two (2) foot section of the building sewer at property line and install a cap on the remaining section of building sewer lateral draining to the main sewer as directed by the Camarillo Sanitary District Inspector. Cap location to marked by a two (2) inch x four (4) inch x five (5) feet stake painted orange, extending one (1) foot above finished grade, and curb marked per Camarillo Sanitary District Standard Plate 15, *Service Lateral*.

2.2.2 Easements

Easements shall be avoided where a reasonable alternative solution exists. Where easements are required, sufficient width shall be provided to allow maintenance and replacement of the sewer.

An easement shall be provided over all public sewers when it is installed outside of public right-of-way.

Permanent sewer easements shall be granted to the District on the face of the final map. Permanent sewer easements shall be shown on the final map. When applicable, separate easement documents for both permanent and temporary easements shall be prepared and presented to the District for acceptance and recording.

The District will accept sewers on private streets that have been designed and constructed to these District standards and upon the granting of a sewer easement to the District.

The District will **not** accept any easement for sewers if said easement cannot be accessed with conventional maintenance equipment and/or a flush truck through its entire length using the following criteria:

1. Access roads shall be designed, constructed, and maintained to support the imposed loads of a total weight not less than sixty-eight thousand (68,000) pounds.

2. The roadway minimum width shall be twenty (20) feet. The surface shall be designed, constructed, and maintained to provide all-weather driving capabilities. Road base without an appropriate topping or binding material does not satisfy the all-weather requirement.

3. Vertical Clearance - The minimum vertical clearance shall be fourteen (14) feet. If trees are located adjacent to the access road, place a note on the plans stating that all vegetation overhanging the access road shall be maintained to provide a vertical clearance not less than fourteen (14) feet at all times.

4. Access Road Grade – The grade for access roads shall **not** exceed ten (10) percent unless approved in writing by the City Engineer. Cross slope shall **not** be greater than two (2) percent.

5. Inside and Outside Turning Radii – The inside turning radius for the access road shall be seventeen (17) feet or greater. The outside turning radius shall be thirty-eight (38) feet or greater. As conventional maintenance vehicles are unable to negotiate "S" curves, a fifty-six (56) foot straight leg must be provided between these types of compound turns, or the radii and/or the access road width must be increased accordingly.

6. Dead-end Access Roads – Dead-end access roads in excess of one hundred fifty (150) feet shall be designed and constructed with approved turnarounds or hammerheads. Turnarounds shall meet the turning radius requirements identified above.

Sewer easement shall be located entirely on one lot. Permanent improvements (building, storage buildings, walls, swimming pools, hardscape, etc.) shall **not** be built within the easement.

2.2.2.1 Minimum Width

Permanent easements shall be twenty (20) feet in width and shall be shown on the plans. Where sewers are deeper than standard depth (eight (8) to twelve (12) feet), permanent easements shall be thirty (30) feet or more in width and shall be shown on the plans. Temporary easements for construction only shall be shown on the plans including date of termination.

2.2.2.2 Lot Lines

Where easements follow common lot lines, the full easement width shall be on one lot in such a manner that access to manholes will **not** be obstructed by walls, trees or permanent improvements (building, storage buildings, walls, swimming pools, hardscape, etc.).

2.2.2.3 Placement of Pipe within Easement

Unless combined with other utilities, sewers shall be placed within the central ten (10) feet of the twenty (20) foot wide easement. *See also Section 2.2.2.1 Minimum Width*

2.2.3 Future Extensions

When an area outside the development can be logically served by future extension of a sewer, the sewer shall extend to the boundary or to the end of a paved street in a manner to facilitate the future extension.

2.2.4 Alignment

Sewer shall be laid on a straight alignment and grade between manholes. Gravity sewer mains shall **not** be designed with horizontal curves unless otherwise approved by the City Engineer. If approved, the minimum horizontal radius of curvature shall be as shown in Table 2-2.

Table 2-2

Minimum Horizontal Radius of Curvature for Sewers

VCP		PVC	
Size (in)	Minimum Radius (ft)	Size (in)	Minimum Radius (ft)
8-12	250	8	400
15-18	350	10	460
21-27	400	12	500
30-39	450		
42-48	500		

(Only one horizontal curve between manholes shall be allowed)

2.2.5 Separation of Water and Sewer Pipes

Adequate horizontal and vertical clearance shall be maintained in accordance with the California Department of Public Health Section 64572, "Criteria for Water Main Separation" and as depicted on Camarillo Sanitary District Standard Plate 25, *Water and Sewer Separation*.

2.3 Depth of Sewers

2.3.1 Basic Requirement

Sewer shall be installed at a depth which will provide suitable service to the properties connected and will allow subsequent installation of water lines in accordance with the Camarillo Sanitary District Standard Plate 25, *Water and Sewer Separation*, with a minimum of special construction of the water and sewer lines other than joint spacing.

2.3.2 Standard Depths

Compliance with Subsection 2.3.1 will usually be assured if the main sewer is located at a minimum depth of seven (7) feet to top of pipe below the flow line of the existing or proposed gutter; or where no gutter exists, from the elevation of the outermost edge of the traveled way; and the building sewer is located either:

A. Six (6) feet to top of pipe below the ground surface at the property line.

B. At a depth below the ground surface at the property line that will provide for the construction of a straight run of lateral sewer at a slope of 0.02 ft./ft., minimum.

Chimneys may be allowed only upon written approval of the City Engineer (for detail of Chimney Lateral Construction, see Camarillo Sanitary District Standard Plate 17, *Steep Service Lateral.*

2.3.3 Exceptions

Designs not in accordance with Subsection 2.3.2 shall be submitted to the City Engineer for approval, together with evidence that they comply with Subsection 2.3.1.

2.4 Sewer Pipe Material

All gravity sewer pipe and fittings shall be either ASTM C700 extra strength VCP, furnished with elastomeric compression joints (SSPWC 208-2.3 Type G Joints) or ASTM D3034 SDR-26 PVC, and furnished with Ring Tight Joints (Bell and Spigot type). Imperfections shall **not** be allowed in either type of pipe.

Building sewers/new construction (from sewer main to property line) shall be of the same material as the main line sewer, either:

- ASTM C700 extra strength Vitrified Clay Pipe (VCP)
- ASTM D 3034 SDR-26 Polyvinyl Chloride (PVC) pipe

Building sewers/new construction (from property line to building) shall be either:

- ASTM C700extra strength Vitrified Clay Pipe (VCP)
- ASTM D 3034 SDR-26 Polyvinyl Chloride (PVC) pipe

All repairs shall be of like materials. SDR – 26 to be used to property line. SDR – 35 is acceptable for existing onsite private lateral repair. Pipe inverts shall match with no offsets or gaps. Refer to Camarillo Sanitary District Standard Plate 20, *Gravity Pipe Field Closure.* HDPE pipe may be used for lateral repair with District approval.

All gravity sewers (including building sewers) in industrially zoned areas (IPD) or major commercial areas (CPD) shall be ASTM C700 extra strength VCP.

Gravity sewer materials having slopes outside of those specified in Section 2.1.7, Minimum and Maximum Sewer Main Slopes, shall be made only of ASTM C700 extra strength VCP. VCP shall also be used for sewers downstream from sewers of substandard slope, to a point where, in the judgment of the City Engineer, the flows meet the minimum flow velocity established in Section 2.1.7.

All sewer forcemains carrying domestic sewage and operating at pressures of less than 40 psi shall be PVC pipe meeting AWWA C-900 Class 200 pipe standards. All other forcemains shall be properly coated, minimum thickness Class 52 Ductile Iron pipe per AWWA Standard C150, to include an eight (8) mil green in color polyethylene encasement per AWWA Standard C105, with 40 mil ceramic epoxy interior lining (Protecto 401).

Refer to Table 2-4 for approved sewer pipe and manufacturers:

Table 2-4

Sewer Pipe Material

Classification	Material and Class	Joint	Manufacture
Residential (RPD) and Commercial (CPD) (Gravity)	Extra Strength Vitrified Clay Pipe (VCP) ASTM C 700	SSPWC 208-2.3 Type G Joints (polyurethane)	Gladding McBean, Mission Clay Products
	Polyvinyl Chloride Pipe (PVC); ASTM D 3034 SDR-26	ASTM F 477 Elastomeric Seals for Joining Plastic Pipe	CertainTeed, Diamond Plastics
Industrial (IPD) (Gravity)	Extra Strength Vitrified Clay Pipe (VCP) ASTM C 700	SSPWC 208-2.3 Type G Joints (polyurethane)	Gladding McBean, Mission Clay Products
Forcemains (pressures less than 40 psi)	Polyvinyl Chloride Pipe (PVC) Class 200 AWWA C 900	ASTM F 477 Elastomeric Seals for Joining Plastic Pipe, ASTM D 3139 Joints for Plastic Pressure Pipe	CertainTeed, Diamond Plastics
Forcemains (pressures more than 40 psi)	Ceramic Lined Interior Ductile Iron Pipe (DIP) Class 52 AWWA C 150	AWWA Standard C 111 Rubber-Gasket Joints for DIP (Push-on Joint)	American Ductile Iron Pipe, US Pipe, Clow Water Systems

Underground Marking:

In compliance with APWA Uniform Color Code and OSHA 1926.956 (c) (1), all sewer piping shall be appropriately identified upon installation. PVC pipe shall be green in color and marked repeatedly in a legible and permanent ink with the word "SEWER" (blue or white will **not** be accepted). Ductile Iron pipe shall have an eight (8) mil green in color polyethylene wrap per AWWA C105 marked repeatedly in a legible and permanent ink the word "SEWER".

2.5 Structures

In accordance with Camarillo Sanitary District Standard Plate 5, *VCP and Concrete Base Section*, flexible joints that will allow for movement of sewer pipe and structures shall be provided within two (2) feet of manholes, interceptors, sampling/monitoring manholes, and encasements.

2.5.0 Concrete

All concrete for sewer structures and sewer pipe encasements shall be Class 560-C-3250 unless otherwise approved by the City Engineer.

Concrete, mortar and related materials incorporated into construction shall comply in all respects with SSPWC 201 Concrete, Mortar and Related Materials. Concrete shall be high sulfate resistance (typical) Type II or Type V. Reinforcing design must be submitted and approved along with the Construction Drawings. Reinforcing bar sizes and placement must be shown on the Construction Drawings.

Structural calculations evidencing the adequacy of the strength and integrity for the purpose intended shall be submitted for approval.

Design loads shall consist of dead load, live load, impact, and in addition, loads due to water table, and any other loads that may be imposed upon the structure.

Live loads shall be H-20 per American Association of State Highway and Traffic Standard Specifications for Highway Bridges with revisions. Design wheel load shall be 16 kips. The live load shall be that loading which produces the maximum shear and bending moment in the structure.

2.5.1 Manholes

Precast Manhole Sections

Materials shall conform to the requirements of ASTM C478. Wall thickness shall be as depicted in Camarillo Sanitary District Standard Plate 1, *Manhole*. Cones shall have the same wall thickness and reinforcement as riser sections. Joints shall be tongue-and-groove type as depicted in Camarillo Sanitary District Standard Plate 2, *Manhole Shaft Joint*. Cone shall be eccentric unless otherwise specified.

Precast Bases

At the discretion of the City Engineer, precast base sections may be used provided all the details of design and construction are approved prior to construction.

Cast-in-Place Bases

If bases are cast in place, the concrete shall be consolidated by mechanical vibration. The concrete shall be screeded off in a manner such that the first manhole section to be placed has a level and uniform bearing area for the full circumference.

2.5.1.1 Locations

A manhole shall be required:

- at the upstream end of each line;
- at the change in grade or pipe size;
- at the change in direction or alignment;
- at the intersection of two (2) or more sewers six (6) inch or greater in diameter;
- along the sewer main at maximum distances of:
    1. two hundred (200) feet for six (6) inch sewers;
    2. four hundred (400) feet for eight (8) inch and larger sewers;
    3. at a maximum spacing of two hundred (200) feet on any sewer where the slope exceeds eight (8) percent.
- at the juncture of a private sewer main system to the public sewer system;
- as directed by the City Engineer.

2.5.1.2 Design

Manholes shall be constructed in accordance with Camarillo Sanitary District Standard Plates 1 thru 9, *Manhole*, *Manhole Shaft Joint*, *Flat Top Manhole Under 5' Depth*, *Drop Manhole with Cleanout*, *VCP and Concrete Base Connection*, *PVC Pipe and Concrete Base Connection*, *Sampling/Monitoring Manhole (Palmer Bowlus Flume)*, *Manhole Frame and Cover*, and *Manhole Opening Orientation*, respectively and Tables 2-5.1 and 2-5.2.

Pipe sizes, number of connections, change in flow path and manhole depth shall govern the internal diameter of manholes and therefore the District at its sole discretion may require larger manholes than listed based on the respective situation.

Table 2-5.1 Manhole Size

Sewer Main (inches)	Maximum Branch Size (inches)	Manhole Size (inches)	Frame and Cover (inches)
8-15	8	48	24
16-21	12	60	30
22-36	15	72	36

Table 2-5.2 Depth Requirements

Depth of Cover (feet)	Manhole Size (inches)
Less than 5	60
6.5 – 12	48
12 – 16	60
Greater than 16	72

A. The minimum drop of elevation through the manhole shall be 0.10 foot. This minimum drop shall also apply to any side inlet to manholes when the pipe size is the same as the main.

B. For an alignment change greater than thirty (30) degrees, the minimum drop of elevation through the manhole shall be 0.20 foot.

C. If necessary, additional grade shall be provided due to bends or change in pipe sizes to overcome the expected loss in energy head.

D. When pipe sizes change at manholes, align the pipe soffit of the inlet at least as high as the pipe soffit of the outlet.

E. For side inlets to manholes where the pipe size is less than the main line, align the pipe soffit of the side inlet with the pipe soffit of the main inlet.

F. Where work involves tying into an existing Camarillo Sanitary District manhole, notes as depicted in the Camarillo Sanitary District Standard Plate 10, *Existing Manhole Connection*, shall be included on the construction plans.

2.5.1.3 Lined Manholes

All manholes, including the shelf and the channel, shall be lined with an approved interior lining as depicted in Camarillo Sanitary District Standard Plate 1, *Manhole*.

2.5.1.4 Drop Manholes

Drop Manholes are subject to the approval of the City Engineer and shall be constructed in accordance with Camarillo Sanitary District Standard Plate 4, *Drop Manhole with Cleanout*.

2.5.1.5 Manhole Covers

A. Manhole covers shall be cast iron in accordance with Camarillo Sanitary District Standard Plate 8, *Manhole Frame and Cover*. Manhole covers shall have one (1) vent hole and one (1) pick hole. Where the City Engineer deems necessary for heightened protection of the public or facilities, Pamrex® hinged manhole frame and locking cover, or approved equal, may be required.

B. Finished elevations of manhole rings and covers shall be set in relation to finished grades of the completed road surface or two (2) inches above finished surrounding grade when outside the road in developed areas and a minimum of three (3) feet above surface in undeveloped areas. Four (4) concrete filled steel posts, six (6) inches in diameter, four (4) feet above ground level set in concrete (minimum two (2) feet of post embedded in thirty (30) inch deep, twelve (12) inch diameter concrete

below ground) and painted safety yellow shall be installed around all manholes in undeveloped areas.

C. Temporary covers - All existing manhole covers shall be protected in place. However, temporary manhole covers may be necessary. In these cases, the manhole shaft shall be left six (6) inches (minimum) and twelve (12) inches (maximum) below subgrade. Temporary covers shall be as approved by the City Engineer; a heavy metal plate shall be provided to cover the manhole opening. Cleats shall be provided in at least four (4) points for the underside of the temporary cover to prevent the temporary cover from moving. The cleats shall extend a minimum of three (3) inches from the cover plate and shall be welded to the plate. All temporary covers weighing more than 90 pounds shall have appropriate lifting devices installed. Any disturbed or temporarily covered manhole shall be reset to grade within five (5) days in accordance with applicable Camarillo Sanitary District Standard Plate 1, *Manhole*, or Plate 10, *Existing Manhole Connection*, as applicable.

D. As approved by the City Engineer, manhole channel protection devices shall be installed before the temporary cover is placed on the shaft. For non-operational, nonfunctioning manholes, Plywood may be cut to the shape and size of manhole base and placed over the channel. For LIVE, WORKING manholes, a manhole insert as manufactured by Parsons Environmental, SSI Custom Plastics or equal shall be installed. Within five (5) days of the completion of final paving and or grading, each manhole shall be raised in accordance with Camarillo Sanitary District Standard Plate 1, *Manhole*, by the installation of grade rings, as necessary, and the installation of the permanent frame and cover assembly in accordance with Camarillo Sanitary District Standard Plate 8, *Manhole Frame and Cover*. Manhole protection devices shall be removed from the manhole when the permanent frame and cover assembly is installed.

2.5.1.6 Odor Control

When required by the District, odor-causing manholes shall be provided with manhole odor control units. A compact, modular canister designed to fit existing round manholes as manufactured by Calgon Carbon Corporation, "Sweet Street Odor Control Unit" or equal shall be installed in the manhole(s). The canister shall be supplied with a high-activity, chemically treated activated carbon specifically designed for use in odor applications. One bag of replacement carbon shall be supplied with each canister.

2.5.1.7 Protection

A. Where work involves tying into a manhole that is in active use, proper protection shall be provided to prevent construction debris from being washed into the active sewers. Inlet plugs or other suitable protection shall be used in the active manhole before beginning manhole modifications or sewer cleaning.

B. The developer and/or Contractor will be held responsible for sewer lines and structures fouled or damaged as a result of new construction. All costs associated with restoring fouled or damaged sewer lines and structures shall be borne by the developer and/or Contractor.

2.5.2 Cleanouts

Use of cleanouts as shown in the Camarillo Sanitary District Standard Plates 16, *Service Lateral* and *Lateral Cleanout*, respectively, shall be limited to the following instances unless approved in writing by the City Engineer:

A. Two (2) feet outside of serviced building (building cleanout).

B. Any change in horizontal or vertical alignments greater than 22.5 degrees overall, and all junctions.

C. At the upstream end of short sections of private sewer main less than two hundred fifty (250) feet in length and will be extended within three (3) months.

D. On a lateral where the overflow level of the lowest wastewater fixture in the building is below the rim elevation of the uphill sewer manhole on the main line. In this situation, the rim elevation of the cleanout installed at the property line shall be at least six (6) inches below the overflow elevation of the lowest wastewater fixture on the lateral. A sewer backflow device is required on the lateral per Section 2.7 and Camarillo Sanitary District Standard Plate 21, *Sewer Backflow Device*.

E. Maximum spacing between cleanouts shall **not** exceed one hundred (100) feet.

2.5.3 Grease, Sand, and Oil Interceptors and Sampling/Monitoring Manholes

Installation of grease, sand, and oil interceptors, sampling/monitoring manholes, and/or manholes on industrial and commercial buildings are subject to the rules and regulations of the Camarillo Sanitary District FOG Control Program, Standard Specifications, Operations Code and Industrial Waste Supplement. All industrial and commercial units shall have installed on the building sewer a manhole per Camarillo Sanitary District Standard Plate 7, *Sampling/Monitoring Manhole (Palmer Bowlus Flume)*, and/or a grease, sand, and oil interceptor per Camarillo Sanitary District Standard Plates 26 and 27, *Sand, & Oil Interceptors* and *Grease Interceptors.*

2.6 Existing Sewer

2.6.1 Connections

Connections to existing sewer shall be accomplished per Section 2.5.1 Manholes, unless otherwise approved by the City Engineer.

A. Connect new mains to existing at existing manholes or by constructing a new manhole over the point of connection.

B. Where an existing sewer main is to be extended, remove the existing plug, cleanout, or rodding inlet and install a manhole. The main may be extended without

installation of a structure only if it is on the same line and grade, the pipe size and material are the same, and the manhole spacing is as required.

C. Where laterals are the same size as the main, connection must be made with a manhole. Use a cut-in-wye per Camarillo Sanitary District Standard Plate 18, *Cut In Wye Connection*, for all other lateral connections.

D. For lateral connections to existing mains, a cut-in-wye shall be used. Saddles shall **not** be allowed. There shall be nothing in this construction that protrudes past the inside wall of the sewer. For details, see Camarillo Sanitary District Standard Plates 15 – 18, *Service Lateral*, *Lateral Cleanout*, *Steep Service Lateral*, *Cut In Wye Connection*, respectively.

2.6.2 Cesspools, Seepage Pits or Septic Tanks

A person shall **not** connect or cause to be connected, either temporarily or permanently, any cesspool, seepage pit or septic tank to any main sewer or building sewer leading to any Camarillo Sanitary District main or lateral sewers. Material from any cesspool or septic tank shall **not** be discharged during pumping into a building sewer leading to any Camarillo Sanitary District main or lateral sewers.

Demolition of cesspools or septic tanks shall be done in accordance with, but not limited to, the requirements of the Environmental Health Department and the City of Camarillo Building and Safety Division.

2.7 Backflow Devices

Sewers shall be designed to preclude the backflow of sewage into laterals. A backflow device shall be installed in any lateral where the lowest floor elevation containing plumbing fixtures is less than one foot above the rim of the nearest upstream manhole. Where required, a sewer backflow device shall be installed per Camarillo Sanitary District Standard Plate 21, *Backflow Device*.

The device must be installed in a vault for easy access and proper maintenance. The vault shall be visible from the public right-of-way. The property owner shall be responsible for the installation and maintenance of the sewer backflow device and vault. The location of the backflow device shall be shown on the precise grading and improvement plans.

2.8 Private Sewer Systems

All plans submitted for review and approval for commercial/industrial developments and residential developments with private sewer systems shall show and call out as "PRIVATE" in the plan view, main line profile, and detail sheets of private onsite sewer systems. The private sewer systems shall be planned, designed, and constructed to the same standards as the District's public sewer system.

Sanitary lift stations on private property shall follow Section 2.9 Private Residential Sanitary Lift Stations. The private property owner shall be responsible for all costs associated with such design, administration, and inspection. Each site shall be reviewed on an individual basis at the time plans are submitted.

All onsite sewer collection systems for commercial/industrial and residential developments shall be private and shall be owned, operated and maintained by the property owner up to the connecting manhole for commercial/industrial (refer to Section 2.5.1.1 Locations, for manhole locations) and the wye on the District's sewer line in a public street or easement for residential. A sampling/monitoring manhole shall be installed at the private side of the property line in accordance with Camarillo Sanitary District Standard Plate 7, *Sampling/Monitoring Manhole (Palmer Bowlus Flume)*. Each building onsite shall have an individual sewer lateral with a sampling/monitoring manhole.

2.9 Private Residential Sanitary Lift Stations

2.9.0 General

Private residential lift stations conveying wastewater flows to the District's collection system shall be inspected by the Camarillo Sanitary District, (805) 388-5332, or its authorized representative. Sanitary Lift Stations shall be avoided, and shall only be allowed upon special conditions that require their use with the written approval of the City Engineer.

Private Residential Sanitary Lift Stations criteria shall be in accordance with Camarillo Sanitary District Standard Plate 29, *Residential Sanitary Lift Station*.

SECTION 3 INSTALLATION

3.0 Installation Requirements

3.0.1 Pipe Bedding, Trench Backfill and Roadway Repair

Pipe bedding shall comply with Camarillo Sanitary District Standard Plate 12, *Pipe Bedding*. Trench backfill and roadway repair shall comply with the Camarillo Sanitary District Standard Plate 23, *Utility Trench Repair within Existing Pavement Area*. Any conditions/requirements placed as part of the Camarillo Sanitary District and/or the City of Camarillo issued permit(s), will supplement these requirements.

Contractor's failure to comply with SSPWC 306-1.1.6 Bracing Excavations is cause for stop work orders until compliance is met.

The Contractor shall provide and maintain at all times during construction, means and devices with which to promptly remove and properly dispose of all water from any source entering the excavations or other parts of the work.

3.0.2 Trench Subgrade

The trench subgrade shall be undisturbed native material. Where ground water or other unstable conditions exist and the native material cannot support the pipe, additional excavation may be required.

3.0.3 Pipe Bedding

The bottom of the trench shall be leveled by hand to the grade to which pipe is to be laid utilizing a minimum four (4) inch compacted depth of pipe bedding material or as specified in the contract documents. Before each section of pipe is laid, the grade shall be checked with a laser and irregularities found shall be corrected. The pipe bedding shall form a continuous and uniformly compacted bearing and support for the pipe to solid and undisturbed ground. Refer to Camarillo Sanitary District Standard Plates 12 and 13, *Pipe Bedding* and *Maximum Allowable Depth to Invert*, and SSPWC 306.1.2 Installation of Pipe for details.

3.0.4 Pipe Slope

All gravity sewer pipe shall be laid to the line and grade shown on the plans and per SSPWC 306.1.2 Installation of Pipe, with a maximum allowable tolerance of 0.01 foot at the invert. The Contractor shall continuously check the grade of the pipe being installed through the use of an approved laser line.

3.0.5 Pipe Zone

The specified bedding material above, around, and below the pipe shall be as depicted in Camarillo Sanitary District Standard Plate 12, *Pipe Bedding*, and SSPWC 306.1.2 Installation of Pipe, unless otherwise directed by the City Engineer.

3.0.6 Tracer Wire for Non-Metallic Pressure Pipelines

Copper tracer wire shall be installed with all non-metallic pressure pipelines just below the horizontal centerline of the pipe, for the purpose of providing a continuous signal path for electronic pipe locators used to determine pipe alignment after installation. The copper wire shall be #12 Copper AWG, with HMWPE insulation and shall be rated for direct burial use at 30 volts. The wire shall be electrically continuous throughout the entire piping system including adjoining assemblies, such as air and vacuum assemblies where the wire shall be extended up the riser. All splices shall be made with a UL approved splice kit for underground applications. The tracer wire shall be APWA color-coded and a "Copperhead SnakePit" magnetized tracer box access point or equal shall be installed at each end. The tracer wire shall be attached to the pipe at 10-foot maximum intervals with plastic adhesive tape. Backfill shall be of a granular material SE 75 or better. The Contractor shall consider the supply, installation and testing of the "Non-Metallic Pressure Pipeline Tracer Wire" as incidental to all construction of non-metallic pressure pipelines.

3.0.7 Trench Backfill

Trench backfill of facilities in existing paved streets or concrete areas shall be in accordance with the Camarillo Sanitary District Standard Plate 23, *Utility Trench.*

Trench backfill materials in all other areas shall be compacted to a minimum relative compaction of 90 percent.

3.0.8 Overexcavation

If excessively wet, soft, spongy, unstable, or similarly unsuitable material is encountered at the surface upon which the bedding material is to be placed, the unsuitable material shall be removed to a depth as determined in the field by the Registered Geotechnical Engineer and replaced with suitable approved crushed rock or granular material. Minimum depth of removal shall be two (2) feet.

3.0.9 Ground Water

Work shall **not** be commenced on sewer construction in an area having a subsurface water level less than two (2) feet below sewer invert, until sufficient pumping equipment is available on the job to keep the excavation dewatered.

Dewatering system shall be designed with recommendations by a registered geotechnical engineer or geologist to eliminate the possibility of damage to structures and property. The design shall be signed, sealed, and submitted to the District a minimum of two (2) weeks prior to start of dewatering work. District's approval of the system shall be for general conformance. The Contractor shall remain fully responsible for obtaining and/or the compliance of all discharge permits, all proper operation of the dewatering system, and any damage resulting from its failure in any manner.

Discharging to sewers and/or storm drain systems require written approval from the appropriate agency.

Sufficient dewatering equipment, including spare pumps shall be maintained at the job site to keep the excavation dewatered.

3.0.10 Compaction Testing

Trench backfill shall be tested at one (1) passing test for each three (3) feet of fill and one hundred (100) LF of trench (e.g. twelve (12) feet to fifteen (15) feet depth class shall require three to five (3-5) tests per 100-LF or as directed by the Registered Geotechnical Engineer. Passing test shall meet the requirements for trench compaction in that segment of trench backfill. All sampling and testing shall be performed by an independent testing laboratory. Sampling locations shall be as determined by the City Engineer or her/his designee.

3.0.11 Abandonment of Pipes and Appurtenances

Existing pipes, when required by the plans or specifications to be abandoned, shall be removed from service by one of the following methods as determined by the City Engineer or her/his designee:

- Pipe four (4) inch and smaller may be cut and plugged with 560-C3250 concrete at intervals not longer than 100-feet (six (6) inch minimum plug)
- Pipe six (6) inch and larger shall be either:
    1. Removed from the ground, in which case all backfill and repair of surface shall be in accordance with applicable portions of these specifications.
    2. Completely filled with two (2) sack slurry by pumping.

Removed pipe shall be legally disposed by the Contractor.

Lateral sewers shall be capped to the satisfaction of the City Engineer. Cap locations shall be marked by a two (2) inch x four (4) inch x five (5) feet stake, painted orange, extending one (1) foot above finish grade and curb shall be marked according to Section 2.2.1.3.

Below grade structures (including manholes) shall be removed to a minimum depth of six (6) feet below finish grade in general conformity with Camarillo Sanitary District Standard Plate 11, *Abandonment of Existing Manhole*. Cavity shall be backfilled with approved material and compacted to the satisfaction of the City Engineer.

3.0.12 Trenchless Reconstruction of Building Sewers

General

Cured in place lateral lining is a trenchless sewer rehabilitation method system by which a flexible fabric tube is impregnated with an approved thermosetting resin and inserted into a damaged sewer lateral.

Once inserted and properly aligned, the liner is inverted using an approved hydrostatic head system. The inversion process forces the resin coated side of the tube to forced out against the existing pipe wall. The process is completed once the liner has fully inverted to the District maintained sewer main, stopping just short of the lateral connection. A calibration tube is then inverted inside the liner. The calibration tube that is sealed at the sewer main is pressurized to secure the liner against the existing host pipe until the liner is fully cured. At no time shall

the calibration tube lose air pressure and be re-pressurized during the inversion process. After the liner is fully cured, the calibration tube is removed. The newly rehabilitated sewer lateral shall be CCTV inspected per Section 4.0.3 CCTV Inspection, for the property owner and Camarillo Sanitary District Inspector's approval. The District's mainline shall also be CCTV inspected per Section 4.0.3 CCTV Inspection for submittal to the Camarillo Sanitary District.

All debris shall be removed from the lateral and **not** be allowed to enter the District sewer main.

Qualifications

The Contractor shall be licensed by the trenchless pipe rehabilitation system manufacturer as an installer of their system and shall have at least five (5) years working experience with their lining system and a minimum of five successful installations. Personnel directly involved with installing the liner shall receive training in the proper methods for handling and installing the liner and its equipment. All training shall be performed by a qualified representative of the manufacturer.

The Contractor shall hold sole liability in any legal action resulting from patent infringements. The District and property owner shall be exempt from any legal action.

Submittals

1. Valid license and proof of worker training issued by the trenchless pipe rehabilitation system manufacturer.

2. Shop drawings, catalog data, and manufacturer's technical data showing complete information on material composition, physical properties, and dimensions of new pipe and fittings. Include manufacturer's recommendations for handling, storage, and repair of pipe and fittings damaged.

3. Method of construction and materials used, including detailed drawings and written descriptions of the entire construction procedure, installation of liner, connection to existing pipe and bypass pumping (if required).

Materials

The liner tube will consist of fiberglass scrim reinforcement and needled felt. Liner tubes made from non-woven or braided felt will **not** be accepted. The liner tube will be fabricated together using a thermobond sealing process. The liner tube will be capable of carrying the required amount of resin and capable of withstanding installation pressures and curing temperatures. The liner tube will be lined on one side with a translucent impermeable polyvinylchloride (PVC) waterproof coating. This coating will be on the inner lateral lined pipe after curing is completed. The coating shall provide a smooth seamless inner wall. For liner installations that span a change in pipe diameter, the liner tube shall be designed to maintain the existing pipe diameters and provide smooth transition between the two.

The resin shall be an approved epoxy resin and catalyst system designed for lateral lining installations.

The liner tube and resin will, upon installation, meet and/or exceed minimum testing standards as required by ASTM, IAPMO, and ANSI/NSF. Third party proof of meeting these requirements shall be submitted to the Camarillo Sanitary District. The materials must have ANSI/NSF Standard-14 and IAPMO certified for small diameter pipe lining. The felt liner tube must have NSF Standard 14 denoted on the tube.

The Cured-In-Place lateral lining system shall satisfy the following ASTM standards D-790, D-638, D-695, and D-543.

Delivery, Storage and Handling

The liner materials and associated fittings shall be handled, transported, stored as recommended by manufacturer to prevent damage. If the new liner materials and fittings become damaged before or during installation, it shall be repaired as recommended by the manufacturer or replaced as required by the Engineer at the Contractor's expense. All materials to be used shall be used within the shelf life listed by the manufacturer.

Testing

Tests for compliance with this specification shall be made as specified herein and in accordance with the applicable ASTM Specifications. A certificate with this specification shall be furnished, upon request, by the manufacturer for all material furnished under this specification.

Equipment

Pressure Launching System: The launching system shall be designed and manufactured to provide the required pressure without interruption for the entire inversion and curing process.

CCTV Inspection Equipment: All CCTV equipment to be used during the liner installation and inspection shall be OSHA approved. The CCTV equipment to be used in the inspection of the mainline sewer must be equipped with a pan and tilt lens for complete inspection of the end of the liner and the mainline/lateral connection. Contractors shall refer to Section 4.0.3 for CCTV inspection standards and procedures.

Permits

The Contractor must obtain all necessary permits and schedule inspection prior to any construction work. The required permits include, but are not limited to:

1. City of Camarillo Encroachment Permit, obtained from the City of Camarillo Public Works Department, for all work conducted in the City right-of-way.

2. Camarillo Sanitary District Sewer Permit, obtained from the City of Camarillo Public Works Department, for all work performed on or in the lateral regardless of excavation location.

3. City of Camarillo Business License

4. Ventura County Encroachment Permit, obtained from the County of Ventura, for all work conducted in the County Right-of-Way.

5. City of Camarillo Septic Tank Abandonment Permit, obtained from the City of Camarillo Building and Safety Department, for all work relating to Septic Tanks.

Should any excavation be required, the Contractor must notify Underground Service Alert of Southern California, a.k.a. DIGALERT and locate all underground utilities prior to beginning any work. The Contractor shall verify that excavation and lining procedures will not interfere with or damage existing utilities.

Access pits shall be shored per all OSHA requirements.

Construction Methods

The Contractor shall notify the property owner and/or current resident 24 hours in advance of the anticipated project start time. All wastewater generating appliances, such as toilets, sinks, dishwashers, laundry washers, etc. shall not be used during the liner installation and curing process. If wastewater generation cannot be interrupted during this time, a by-pass pumping system shall be setup.

The lateral to be lined shall be thoroughly cleaned prior to liner installation. All sand, rocks, grit, grease, dirt, debris and roots shall be removed to permit proper installation. Prior to starting the cleaning operations, a trap shall be set in the downstream manhole to catch any debris cleaned from the lateral. This trap shall remain in place until the post rehabilitation inspection has been approved by the Camarillo Sanitary District.

After the lateral has been thoroughly cleaned, a color mini-CCTV camera shall be used to internally inspect the pipe. This inspection shall be recorded on DVD for the property owner and Camarillo Sanitary District Inspector's approval. The video inspection shall assess the interior condition of the lateral and confirm suitability for lining. This inspection must be performed within five (5) hours of the installation of the liner. Contractors shall refer to SSPWC 500-1.1.5 Television Inspection, for CCTV inspection standards and procedures.

The resin-impregnated tube shall be handled and stored as per the manufacturer's requirements until it is loaded into the pressure launching system. The launching system shall then be aligned with the host pipe for proper installation.

Should the resin-impregnated tube become dirty, contaminated or diluted during the transport, storage or loading procedures, the tube shall be discarded and a new one used.

The liner tube shall then be inverted using the approved pressure system as recommended by the manufacturer. The inversion process shall continue until the liner reaches the District maintained sewer line or the entire liner has been inverted. At no time shall the liner extend into the District's sewer line. The liner is designed to fit tightly against the host pipe, bridging gaps and defects and leaving no annular space. After complete liner inversion, the liner will be open at the end and a calibration tube will be inverted inside of the liner tube to ensure that the liner will fit tightly in the host pipe. The calibration tube will remain pressurized in the lateral until the liner is completely cured as recommended by the manufacturer.

Once the curing process has ended, the calibration tube shall be removed and the liner shall be prepared for testing and CCTV inspection.

Inspection

The Contractor must obtain all necessary permits and schedule inspection prior to starting construction. Starting work before a permit is obtained or without a permit is subject to a fine and the Contractor may be banned from performing future work in the City of Camarillo.

The newly installed liner shall be tested according to City of Camarillo Building and/or Sanitary District requirements. The inspection shall show the liner to be free of protrusions, gashes, blisters, abrasions and shall provide a smooth, seamless and continuous lined pipe from entry point to the end of the liner. Should the liner span a change in diameter, the liner shall provide for a smooth transition between

diameters. This inspection shall be recorded for review by Camarillo Sanitary District. Any defects observed shall be replaced at no cost to the property owner or the Camarillo Sanitary District. A copy of this inspection shall be submitted to the property owner.

Following the internal inspection of the lined lateral, the Contractor shall CCTV inspect the District's mainline sewer. This inspection shall be recorded on DVD for the property owner and Camarillo Sanitary District Inspector's approval. This inspection shall show that no liner or associated materials are protruding into or have been deposited in the District's line. The camera shall pan into and around the mainline/lateral connection. Should the inspection show any foreign materials in the District's sewer, they shall be removed immediately. All materials shall be removed at the next downstream manhole using a trap or vacuum truck. A copy of the recording shall be reviewed by the District inspector and a copy submitted to the Camarillo Sanitary
District.

Upon passing the required tests and inspections, all open or disconnected pipes shall be joined to the existing lateral pipes using a coupling device approved by the Camarillo Sanitary District and/or City Building Department. The new connection shall **not** compromise the structural stability or previous rehabilitation efforts in the mainline sewer serving the lateral.

After all connections are made and inspected by the appropriate Inspectors, any access pits shall be backfilled per all applicable standards.

All pipe connections made must be inspected prior to backfilling and resurfacing. Photographs will **not** be accepted in lieu of inspection.

3.0.13. Jacking and Boring Steel Casing and Installation of Carrier Pipe

General

The Contractor shall comply with the lawful requirements of the State of California, Department of Transportation, California Division of Industrial Safety, California Regional Water Quality Control Board, City of Camarillo, Camarillo Sanitary District, and other public agencies, railway companies, public utilities or other facilities with respect to safeguarding traffic and other improvements which might be endangered by the jacking and boring operations. The approach trenches in public streets shall only be permitted to remain open when the work is in progress.

The Contractor shall comply with the following Specifications, Codes and Standards however, not limited to:

- ASTM A 283 Standard Specification for Low and Intermediate Tensile Strength Carbon Steel Plates
- ASTM A 570 *Withdrawn 2000, Replaced by ASTM A1011*
- ASTM A1011 Standard Specification for Steel, Sheet and Strip, Hot Rolled, Carbon, Structural, High Strength Low-Alloy, High-Strength with Improved Formability, and Ultra-High Strength
- ANSI/AWS D1.1 Structural Welding Code - Steel
- SSPWC 306-2 Jacking Operations
- SSPWC 306-3 Tunneling Operations
- Government Code, Sections 4216 - 4216.9 Regional Notification Center System
- Title 8, California Code of Regulations, Sections 1539 – 1549 Excavations
- Camarillo Sanitary Districts Standard Specifications Standard Plate 22, *Steel Casing*

Qualifications

All Jacking, Boring and/or Tunneling shall be done by a qualified Contractor with at least five (5) years of experience, with a minimum of five (5) projects involving work of a similar nature.

All Welding shall by Certified Welders, as depicted in ANSI/AWS D1.1. Certification shall be by an Independent Local, approved testing agency and not more than six (6) months prior to commencing work.

Submittals

Shop Drawings:

- The Contractor, prior to beginning any trench or structure excavation more than five (5) feet deep or the possibilities of soil movement at shallower depths shall submit to the Registered Geotechnical Engineer and shall be in receipt of the Registered Geotechnical Engineer's written acceptance of the Contractor's detailed plan showing design of all shoring, bracing, sloping of the sides of excavation, or other provisions for worker protection against the hazard of caving ground during the excavation of such trenches or structure excavation. The Contractor's attention is directed to the provisions for "Shoring and Bracing Drawings" in Section 6705 of the California Labor Code. If such plan varies from the shoring system standards established in the Construction Safety Orders of the State of California, such alternative systems plans shall be prepared by a Civil or Structural Engineer licensed in the State of California.

- Casing installation schedules, which shall include schedules of excavation, pipeline installation, and backfill operations.

- Material list including diameter, thickness, and class of steel casing, method of fabrication and detail of field joints.

- Detailed locations and sizes of all jacking and boring, and receiving pits.

- Detailed drawing and description of the jacking head.

- The method of transporting the pipe in the casing and the method of "tugging" the pipe into the joints.

- Details of bracing to prevent the carrier pipe from shifting or floating during the installation of the grout. Include full details of proposed tunnel supports including connections, longitudinal and transverse bracing, foot blocks and metal skids, the proposed method of backpacking tunnel supports, location of grout connection holes and other pertinent details.

- All permits associated with the jacking and boring operations.

- Certifications, certified affidavit of compliance for all pipe and other products or materials furnished, including physical and chemical properties of all steel.

Steel Casing Pipe

Steel casing shall be welded steel pipe with a minimum inside diameter of twenty four (24) inch and wall thickness not less than 0.5-inch, unless otherwise directed by the City Engineer.

All steel casing pipe shall conform to ANSI/AWWA C200, subject to the following supplemental requirements. They shall be furnished complete with full circumference welded joint ends and standard two (2) inch diameter couplings

(threaded inside) welded to casing pipe which will be used for pressure grouting the exterior of the casing pipe as shown on Camarillo Sanitary District Standard Plate 22, *Steel Casing.*

Exterior Grouting

Immediately after completion of the jacking or boring operations, the Contractor shall inject grout through the grout connections in such a manner as to completely fill all voids outside the casing pipe resulting from the jacking or boring operations. Grout pressure shall be controlled so as to avoid deformation of the steel casing and avoid movement of the surrounding ground. After completion of the grouting operations, the Contractor shall close the grout connections with cast-iron or galvanized steel threaded plugs.

Grout shall consist of one (1) part Portland cement, three (3) parts sand, and the minimum amount of water necessary to obtain the desired consistency and all grout mixtures shall contain two (2) percent of bentonite by weight of the cement. Portland cement, water and sand shall conform to the applicable requirements of SSPWC, except the sand to be used shall be of such fineness that one hundred (100) percent will pass a Standard No.8 sieve and at least 45 percent, by weight, will pass a Standard No. 40 sieve. Bentonite shall be commercial processed powdered bentonite, Wyoming-type.

Carrier Pipe

Sewer carrier pipe shall be Extra Strength Vitrified Clay Pipe (VCP) with no bells, forty (40) mil Ceramic Epoxy Lined Ductile Iron Pipe (DIP) or PVC SDR 26, as approved by the City Engineer.

Carrier pipe shall be installed to the line and grade shown on the Contract Documents.

The carrier pipe shall be supported in a center restraint position by Stainless Steel casing spacers, as manufactured by Cascade Mfg. or equal. Spacers shall be placed at intervals recommended by the spacer manufacturer and as directed by the City Engineer.

All carrier pipe joints within the casing shall be restrained type, as approved by the City Engineer.

Prior to interior grouting, the sewer carrier pipe shall pass a successful test for leakage as described in Section 4.

Interior Grouting

After the carrier pipe has been installed in the casing and successfully tested, unless otherwise directed by the City Engineer, the intervening annular space shall be filled with a lean grout under pressure. Sand will **not** be permitted for such backfilling. In order to ensure that all air escapes from the space to be filled, and said space is completely filled with grout, the annular space shall be tightly

bulkheaded at each end and suitable riser pipes there installed, connected with the top of the tunnel/bore.

Grout shall consist of one (1) part Portland cement, three (3) parts sand, and the minimum amount of water necessary to obtain the desired consistency. Portland cement, water and sand shall conform to the applicable requirements of SSPWC, except the sand to be used shall be of such fineness that hundred (100) percent will pass a Standard No.8 sieve and at least fortyfive (45) percent, by weight, will pass a Standard No. 40 sieve.

Permits

The Contractor shall secure all necessary permits, including Cal OSHA, Caltrans, County and City permits, for start and prosecution of jacking and boring construction, including drilling or blasting permits if rock is encountered. All work shall conform to the necessary permits, current specifications and other applicable requirements. Where the permit requirements exceed the requirements of this Section, the permit requirements shall govern.

Construction Methods

The Contractor shall be responsible for maintaining the specified line and grade, and for preventing settlement of overlying structures, or other damage due to the jacking and boring operations, as determined by the local agency or owner of the property over the tunnel.

All tunnel supports shall comply with the requirements of Tunnel Safety Orders of the State of California, Department of Industrial Relations.

The Contractor shall notify "DIGALERT" two (2) working days prior to beginning excavation, tunneling or boring operations.

Inspection

The Contractor must obtain all necessary permits and schedule inspection prior to starting construction. Starting work before a permit is obtained or without a permit is subject to a fine and the Contractor may be banned from performing future work in the City of Camarillo.

All materials, line, grade, pipe connections, leakage testing and grouting performed/made must be inspected prior to backfilling and resurfacing. Photographs will **not** be accepted in lieu of inspection.

SECTION 4 INSPECTION AND TESTING

4.0 Sewers

4.0.1 General

All work done shall be subject to inspection by and shall meet the approval of the City Engineer or her/his representative.

All necessary permits must be issued before any inspection will be given.

All leakage tests and all post-installation closed circuit television (CCTV) inspections shall be completed and approved prior to placing of permanent resurfacing.

All testing shall be performed in the presence of the City Engineer or her/his representative.

All tests shall be conducted at no expense to the District. The Contractor shall provide all equipment and personnel for the tests. The Contractor shall be required, at the Contractor's expense, to locate and repair any sections failing to pass the tests and re-test the section (manhole to manhole).

Calls for inspection shall be made with the Public Works Inspector, Monday - Friday, excluding holidays. A two (2) working day notice shall be given for inspections and tests.

4.0.2 Testing and Final Acceptability of Material

The City Engineer will require such tests and certifications as deemed necessary to show that the specified materials are being used on the work. Notwithstanding prior factory or yard inspections, the City Engineer will have the right to reject any damaged or defective materials found on the job which, in her/his opinion, will affect the durability of the installation, and the City Engineer or her/his representative may order its removal from the site.

4.0.3 CCTV Inspection

The Contractor shall perform Closed Circuit Television inspection (CCTV) of all gravity sewers to determine alignment, grade, and damaged or defective pipe in place; after the pipe has been installed, backfilled and compacted to grade, tested for leakage, manholes raised to grade, but prior to final resurfacing, from manhole to manhole. CCTV inspection shall be recorded on DVD, and recording procedures shall conform to these requirements and SSPWC 500-1.1.5, Television Inspection, except that the maximum speed shall be fifteen (15) feet per minute. The DVD shall play on standard computer with standard media software, or Contractor shall provide viewing software. The recording shall continuously display the following on-screen data: contract number, project name, date, time, distance (in feet) from the insertion manhole, and manhole and pipeline identification codes.

Two copies of the recordings shall be submitted within two (2) days of the CCTV inspection to the District for approval. CCTV recording shall be performed first with the pipe dry, and then immediately following clean water flowing in the pipe to clearly indicate vertical misalignments, sags, or other defects. Should CCTV inspection indicate any faulty

installation of the pipe, repairs or replacement shall be made at the Contractor's expense by a method approved by the District. Repaired and/or replaced pipe and/or segments shall be retested and re-inspected through CCTV at no additional cost to the District, until final acceptance is granted. Any sag greater than one (1) 0.25-inch in hundred (100) feet of pipe reach shall be considered excessive, and the pipe shall be removed and reinstalled to proper grade.

4.0.4 Gravity Pipe Leakage Tests

All gravity sewer pipes and service laterals shall be tested in the presence of the Public Works Inspector for exfiltration and/or infiltration prior to placement of permanent pavement/resurfacing. All leakage tests shall be in conformance with SSPWC 306-1.4 Testing Pipelines.

- Water exfiltration test shall be in conformance with SSPWC 306-1.4.2 *Water Exfiltration Test.*
- Water infiltration test shall be in conformance with SSPWC 306-1.4.3 *Water Infiltration Test.*
- Air pressure test for VCP shall be in conformance with ASTM C 828 *Low-Pressure Air Test of Vitrified Clay Pipe Lines.*
- Air pressure test for PVC shall be in conformance with ASTM F 1417 *Installation Acceptance of Plastic Gravity Sewer Lines Using Low-Pressure Air*

4.0.5 Deflection Test for Plastic Pipe and Fittings

In addition to hydrostatic or air testing, all plastic pipe sewers shall be tested for maximum allowable deflection and/or obstructions after the trench backfill and compaction has been completed, and prior to the placement of permanent asphalt. The test shall be conducted by pulling an approved solid pointed mandrel through the completed pipeline. The diameter of the mandrel shall be per the SSPWC 306-1.2.12, Maximum Allowable Deflection for Plastic Pipe and Fittings, unless otherwise specified by the City Engineer. Testing shall be conducted on a manhole-to-manhole basis and shall be done after the line has been completely flushed out with water.

Calls for inspection shall be made with the Public Works Inspector, Monday - Friday, excluding holidays. A two (2) working day notice shall be given for inspections and tests.

4.0.6 Forcemain Pipe Leakage Tests

All Forcemains shall be subject to a hydrostatic pressure test according its applicable AWWA specification:

- AWWA C 600, Installation of Ductile Iron Mains and their Appurtenances (DIP)
- AWWA C 605 Underground Installation of Polyvinyl Chloride (PVC) Pressure Pipe and Fittings for Water

4.0.7 Manhole Leakage Tests

Leakage tests shall be made and observed by the Public Works Inspector or his/her representative on each manhole. The test shall be the exfiltration test made as described below:

1. After the manhole has been assembled in place, all lifting holes and those exterior joints (only) within two (2) feet of the ground surface shall be filled and pointed with an approved non-shrinking mortar. If the groundwater table has been allowed to rise above the bottom of the manhole, it shall be lowered for the duration of the test. All pipes and other openings into the manhole shall be suitably plugged and the plugs shall be braced and secured in place to prevent movement.

2. The manhole shall then be filled with water to the top of the cone section. If the excavation has not been backfilled and observation indicates no visible leakage (that is, no water visibly moving down the surface of the manhole) the manhole may be considered to be satisfactorily water-tight. If the test, as described above, is determined unsatisfactory by the Public Works Inspector or if the manhole excavation has been backfilled, the test shall be discontinued. A period of time may be permitted if the Contractor so wishes, to allow for absorption. At the end of this period, the manhole shall be refilled at the top of the cone, if necessary, and the measuring time of at least eight (8) hours initiated. At the end of the test period, the manhole shall be refilled to the top of the cone, measuring the volume of water added. This amount shall be extrapolated to a 24 hour rate and the leakage determined on the basis of depth.

   The leakage for each manhole shall **not** exceed one (1) gallon per vertical foot for a 24 hour period. If the manhole fails this requirement, but the leakage does not exceed three (3) gallons per vertical foot per day, repairs by approved methods may be made as directed by the District to bring the leakage within the allowable rate of one (1) gallon per foot per day. Leakage due to a defective section or joint or exceeding the three (3) gallon per vertical foot per day shall be the cause for the rejection of the manhole. It shall be the Contractor's responsibility to uncover the manhole as necessary and to disassemble, reconstruct or replace it as directed by the City Engineer. The manhole shall then be retested and, if satisfactory, interior joints shall be filled and pointed.

3. Adjustment in the leakage allowance will be made for unknown causes such as leaking plugs, absorptions, etc., i.e., it will be assumed that all loss of water during the test is a result of leaks through the joints or through the concrete. Furthermore, the Contractor shall take all steps necessary to assure the Public Works Inspector that the water table is below the bottom of the manhole throughout the test.

4. If the groundwater table is above the highest joint in the manhole, and if there is no leakage into the manhole as determined by the Engineer, such a test can be used to evaluate the water-tightness of the manhole. However, if the City Engineer is not satisfied, the Contractor shall lower the water table and carry out the test as described herein before.

SECTION 5 STANDARD NOTES

5.0 STANDARD SEWER NOTES

The following notes must appear on the plans under Standard Sewer Notes:

1. Public Works Department 601 Carmen Dr. Camarillo, California 93010.

2. The sewer Contractor shall have a copy of the Project Plans and Specifications, as well as the Camarillo Sanitary District Standard Specifications on the job site.

3. The Contractor shall obtain a City and/or County permit for work that encroaches within public right-of-way.

4. Sewer system shall be constructed in accordance with the Camarillo Sanitary District Standard Specifications.

5. The Public Works Office shall be called for inspection five (5) working days before start of work and two (2) working days prior to any request for inspection at (805) 388-5350.

6. A pre-construction conference shall be held two (2) working days before starting construction work.

7. The Contractor shall expose all join points to the existing sewer system for verification of location and elevation before construction.

8. Stations shown as 1+00.00 are sewer stations and are independent of all other stations.

9. All laterals shall be staked by a surveyor before trenching, and a complete set of cut sheets shall be supplied to the Contractor and the Public Works Inspector.

10. All pavement removals shall be saw cut.

11. Vertical trench shoring shall conform with the orders of the State of California, Division of Occupational Safety and Health (CAL/OSHA)

12. The Public Works Inspectors shall be responsible for the inspection of the sewer collection system and lateral sewers to the property line and the lateral sewers from the property line to the building clean-out.

13. All sewer lines shall be cleaned, either balled or jetted, in the presence of the Public Works Inspector before completion of all leakage tests.

14. Pipeline leakage tests shall be made in the presence of the Public Works Inspector, only after backfill has been completed, compaction tests on backfill have been made, and the backfill has been accepted by the Public Works Inspector.

15. All sewer main lines shall be inspected using a closed circuit television system. Two (2) recordings shall be made of the inspection on a DVD disk in accordance with the Camarillo Sanitary District Specifications Section 4.0.3.

16. The Contractor shall provide the Camarillo Sanitary District with an as-built set of job prints with tie-down measurements for all wyes, laterals, and manholes before final acceptance.

17. The Developer's engineer signing the plans shall furnish the Camarillo Sanitary District with a set of as-built mylars of the sewer plan before final acceptance.

18. Curbs or pavement surfaces in alleys where sewer laterals exist shall be inscribed with an "S" indicating locations of all sewer laterals.

19. Curbs shall be inscribed with ties for all manhole locations.

20. Recessed traffic plates shall be utilized to cover excavation trenches at the end of each day. Safety devices shall be placed, as required by City Engineer.
Add the following note to plans having on-site work that will be dedicated to the District:

> *Trench backfill shall be compacted to a minimum of 90 percent relative density as determined by the five-layer test method (California 216G). Tests will be required every 300-feet horizontal and three (3) feet vertical of trench or as determined by the District Inspector. The developer shall submit written results of compaction testing to the District before acceptance. If in dedicated street or future street, compaction will be as required by governmental agency having jurisdiction, but no less than 90 percent relative compaction.*

Add the following note to plans having Camarillo Sanitary District sewer easement:

> *Sewer easement area dedicated to the Camarillo Sanitary District shall be designed, constructed and maintained to support imposed minimum loads of 68,000 pounds, 20-feet minimum all-weather driving capability width and a minimum vertical clearance of 14-feet (all vegetation overhanging the easement shall be maintained at all times).*

SECTION 6 SANITARY PUMP STATIONS

Private residential lift stations conveying wastewater flows to the District's collection system, shall be inspected by the Camarillo Sanitary District, or its authorized representative. Sanitary lift stations shall be avoided, and shall only be allowed upon special conditions that require their use with the written approval of the City Engineer.

6.0 General Requirements

The detailed design criteria for each sewer pump station will be established based upon the specific conditions of each installation on a case-by-case basis and documented in a preliminary design report. Sanitary lift stations shall be designed according to the following criteria:

- The general criteria outlined here shall apply to all sanitary lift stations. However, private residential sanitary lift stations criteria shall be in accordance with Section 2.9, Private Residential Sanitary Lift Stations.
- Unless otherwise approved by the City Engineer, the pump stations will consist of, but not limited, to wet well, valve vault, electrical/equipment room, a minimum of three (3) submersible sewage pumps, guide rails, wet well access, discharge seal and elbow, motor control center, starters, programmable logic controller, integration with Camarillo Sanitary District SCADA system, ultrasonic level indicators, permanent standby generator/automatic transfer switch, peak flow storage, air monitoring and ventilation system, and all other hardware necessary to make a complete working system per the Camarillo Sanitary District.
- It shall be possible to remove and replace the submersible pumps without dewatering the wet well or disconnecting the piping. Pumps shall be of the pull up design, using a lifting cable and guides for pump removal. The pump shall be connected to the fixed discharge piping with a self-locking coupling. Shaft seal failure or potential seal failure detection alarms shall be provided.
- Pumps shall be either the recessed impeller or enclosed screw impeller type, as determined by the City Engineer.
- Pump and motor shall be suitable for continuous operation at full nameplate load while motor is completely submerged, partially submerged, or totally non-submerged.

6.0.1 Standards and Codes

Sewer pump station designs shall be based upon current codes and standards, including but not limited to:

- Statewide General Waste Discharge Requirements covered under Order 2006-0003 issued by the State Water Resources Control Board on May 2, 2006
- Hydraulic Institute Standards

- California Administrative Code, Title 8, Article 59-Electrical Safety Orders
- National Electrical Code
- NFPA 820 Fire Protection in Wastewater Treatment Plant and Collection System Facilities
- Uniform Building Code
- Uniform Plumbing Code
- Uniform Mechanical Code
- California Fire Code
- National Electrical Manufacturers Association (NEMA)
- American Society of Heating, Refrigerating, and Air Conditioning Engineers (ASHRAE)
- Standard Specifications for Public Works Construction
- Standard Plans for Public Works Construction
- OSHA Construction Safety Orders
- American Water Works Association
- American Society for Testing Materials

6.0.2 Design Flows and Heads

The pump stations shall be designed with three (3) or more pumps in a Lead, Lag, and Standby arrangement. Pump stations shall have a firm pumping capacity equaling the greater of:

- Tributary peak wet weather flow
- Flow that will provide a minimum velocity of three (3) fps in the forcemain

The standby pump will have the same capacity as the largest pump in the pump station.

In selecting the capacity and operating characteristics of the pumps, the minimum, average, peak dry weather and peak wet weather flows, as well as wet well size and operating band, shall be considered. The selected design shall minimize pump cycling and odors.

The total dynamic head (the sum of static lift, velocity head, and frictional losses in the station piping, valving, and forcemain) shall be determined for all operating conditions, wet well and discharge point water surface elevations, and a range of frictional coefficients (Hazen-Williams C factor of 80 to 150).

Calculations documenting the determination of flows and head calculations shall be submitted along with pump curves and catalog information for the recommended pumps.

Prior to final acceptance, the design engineer shall obtain written verification from the recommended pump manufacturers that the selected pumps shall perform throughout their operating range as designed at the published efficiencies free from cavitation, vibration, and premature failure.

6.0.3 Drivers

The pumps shall be driven by submersible motors. All motors shall be Factory Mutual (FM) or Underwriters Laboratories, Inc. (UL) listed explosion proof type. Motors operated by variable frequency drives shall be inverter duty motors. Nameplate horsepower shall be at least 20 percent greater than the maximum brake horsepower needed within the operating range of the pump.

Pump stations shall be designed with constant speed pumps. Larger pump stations may require the use of variable speed drives. The decision of the City Engineer of the Camarillo Sanitary District shall be final as to the type of drive to be used.

Variable frequency drives shall be provided with bypass contactors to operate the pumps at full speed.

6.0.4 Wet Well

The wet well shall be sized to:

- Provide adequate submergence
- Provide adequate net positive suction head available (NPSHA)
- Prevent frequent pump cycling
- Provide emergency storage

Submergence provided shall prevent formation of vortices and air being drawn into the pump. It shall also prevent cavitation. The minimum submergence shall be at least one (1) foot greater than that required by the pump manufacturer.

The net positive suction head available shall be calculated as:

$NPSHA=2.24\ (P_a-P_v)\ H_l \pm Z$ Where:

P_a= Atmospheric pressure (psia)

P_v= Vapor Pressure of liquid at the maximum expected temperature (use 0.59 psia)

H_l= Friction and minor losses between the wet well and the pump suction flange in feet of liquid

Z= Difference in elevation between the minimum wet well water level and pump datum, in feet. Use – when the pump datum is higher than the minimum wet well water level.

The minimum NPSHA shall be at least eight (8) feet greater than the net positive suction head required (NPSHR) by the selected pump for the maximum expected flow through the pump.

The wet well shall be sized to provide the storage capacity that will preclude exceeding the following number of pump starts per hour:

Motor HP	Maximum Starts	Minimum Cycling Time
Up to 20	6	10
25 to 50	4	15
60 to 75	3	20
100 and larger	2	30

Wet well bottom corners shall be sloped at 1:1 and slope to the suction pipe inlet to prevent the accumulation of debris on the wet well floor.

Influent pipe(s) shall **not** enter the wet well in a position which may cause pre-rotation of the flow into the pump suction, and turbulence in the wet well. The influent velocity into the wet well shall be no greater than three (3) feet per second.

For large pump stations, a partition wall(s) with sluice gates may be required to isolate a portion of the wet well for cleaning.

6.0.5 Emergency Storage

Emergency storage volume needed shall be evaluated for each pump station based upon the tributary area and expected ultimate wastewater flows. The minimum volume of emergency storage shall be 30 minutes of ultimate peak wet weather flow without surcharging the tributary collection system. The emergency storage volume may be provided in the wet well or in a separate adjacent PVC lined overflow structure.

Where possible, the invert of the overflow structure shall be higher than the low water elevation of the pump station wet well to allow gravity drainage of the stored sewage to the wet well. There shall be a minimum of two (2) connecting pipes between the overflow structure and the wet well. The connecting pipes shall be equipped with flap gates on the wet well side. The floor of the overflow structure shall slope to the connecting pipes.

All overflow structures shall be equipped with an access hatch, and three (3) thirty (30) inch diameter maintenance access holes. A 2½ inch water connection shall be provided near the overflow structure for use in periodic cleaning. The water supply connection shall have an approved reduced pressure principle backflow preventer installed prior to use.

The higher of the maximum storage level and overflow level shall be set at least one (1) foot lower than the top of the lowest manhole in the system, basement or p-trap of the plumbing fixture connected to the system.

6.0.6 Valve Vault

Valve Vault shall be required to house the:

- Isolations valves
- Check valves
- Magnetic flow meter
- Emergency bypass connection, four (4) inch minimum with cam lock and isolation valve

Valve vault shall be sized to provide adequate space for maintenance of all equipment housed in it. It shall have a minimum of two (2) access ladders, and full opening traffic rated cover with support beams as needed.

6.0.7 Standby Equipment

All pump stations shall have standby equipment capable of handling the ultimate peak wet weather flow during a commercial power outage and/or with the largest unit out of service. This criterion shall apply to all essential electrical and mechanical equipment including pumps/motors, fans, air compressors, and sump pumps.

There shall be a minimum of one standby main sewage pump equal in size to the largest duty main sewage pump in the station.

All pump stations shall have a permanent standby generator and an automatic transfer switch sized to start and operate all the sewage pumps needed for ultimate peak wet weather flow, sump pump, ventilation fans, lighting, instrumentation, controls, and telemetry, with voltage dip **not** to exceed sixteen (16) percent when starting any motor.

Generators shall be skid mounted, permanently anchored to the foundation, and housed in an acoustically insulated enclosure. Exhaust mufflers shall be super critical grade designed for noise level **not** to exceed the noise level allowed within each particular area.

Load banks sized for 80 percent of the generator capacity shall be provided. Load banks shall be mounted in the vicinity of the generator and protected with adequate enclosure suitable for the location as required by NEMA Standards.

Standby generators shall be furnished with battery chargers and block heaters.

The standby generator shall be a diesel-powered generator. The diesel fuel powered generators shall be equipped with a skid base fuel tank sized for a minimum of twenty-four (24) hours of continuous full load operation. Standby generators shall be units pre-approved by the South Coast Air Quality Management District.

6.0.8 Pump Requirements

All pumps shall have three (3) submersible sewage pumps, minimum two (2) on duty and one (1) on standby. Each pump shall be designed to handle the ultimate peak wet weather design flow rate expected from the tributary area. The designer shall submit an analysis of capacity needs for the area. Pumps shall be three (3) phase with no one (1) to three (3) phase converters, have a minimum four (4) inch discharge capable of passing a three (3) inch solid.

6.0.8.1 Recessed Impeller Centrifugal Pumps

Recessed impeller centrifugal pumps are designed to handle stringy materials and up to 25 times the amount of solids of conventional nonclog pumps. Some recessed impellers are labeled by pump manufacturers as torque-flow, bladeless, and sphere flow. However, all of these pump models follow the general design of placing the impeller away from the fluid stream in order to pass stringy material without clogging the hydraulic passages.

The recommended minimum design criteria in the selection of recessed impeller centrifugal pumps are as follows:

A. Pump impeller shall be selected with the best possible efficiency at design point or at the operating range of the pump.

B. Maximum Speed:

1750 rpm or shall **not** exceed the limitation as recommended by the Hydraulic Institute Standards for Centrifugal Pump application.

C. Materials of Construction

NiHard (minimum of 550 Brinnell hardness) or Stainless Steel Type 316 impeller with a removable wear plate of the same material as the impeller.

NiHard (minimum of 550 Brinnell hardness) or Cast Iron casing, as determined by the City Engineer.

Stainless Steel Type 316 shaft.

Tandem mechanical shaft seal system for the motor with two (2) totally independent seal assemblies and Tungsten-Carbide seal faces.

D. Upper and Lower Bearings

Radial and thrust bearings, grease lubricated with minimum B10 bearing life of 60,000 hours for the operating range of the pump.

E. Slide Away Coupling

Foot mounted discharge elbow and adaptor, base plate, upper and lower rail supports, lifting yoke, and cable. All metal-tometal interfaces where movement may occur shall be nonsparking.

F. Electric Motor

For wet well installation, motors shall be FM or UL listed, and be designed for Class I, Group D, Division 1 explosion proof.

NEMA Design B, heavy duty, high efficiency, non-overloading, with a nameplate horsepower rating a minimum of twenty (20) percent greater than the maximum horsepower required over the operating range. Thermal overload protectors imbedded in the motor windings.

Dual moisture or leak sensors on the sealing chamber.

If installed in a dry well, motors shall be immersible capable of operating continuously in air without the use of sewage pumped for cooling.

Motors located in a damp environment and in a dry pit shall have two (2) cycles of solid baked epoxy vacuum impregnation.

Motors shall be inverter duty if operated by variable frequency drives.

G. Painting and Coating

All Non-Stainless Steel ferrous wetted surfaces in contact with wastewater shall be coated with coal tar epoxy enamel. Surface preparation shall be in accordance with SSPC-SP5, white metal blast cleaning. Prime coat to DFT=l.5 mils, Amercoat 71, Engard 422 or equal. Two (2) or more coats, DFT=16 mils, Amercoat 78HB, Engard 464 or equal.

Total system DFT=17.5 mils.

All Non-Stainless Steel ferrous external surfaces exposed to corrosive environment shall be coated and painted by aminecured epoxy. Surface preparation shall be in accordance with alkaline cleaned, SSPC-SP1. Prime coat and finish coat shall be three or more, DFT=16 mils. Amercoat 395, Engard 480 or equal.

6.0.8.2 Screw-Centrifugal Pumps

The recommended minimum design criteria in the selection of the screw-centrifugal pumps are as follows:

A. Pump impeller shall be selected with the best possible efficiency at design point or at the operating range of the pump

B. Maximum Speed

1750 rpm for pumps with discharge nozzle diameter up to twelve (12) inch.

1175 rpm for pumps with discharge nozzle diameter from fourteen (14) inch to sixteen (16) inch.

Shall **not** exceed the speed limitation recommended by the Hydraulic Institute Standards for Centrifugal Pumps.

C. Materials of Construction

Cast Iron with Hi Chrome suction liner or 316 Stainless Steel where available.

Stainless Steel Type 316 impeller and shaft.

Tandem mechanical shaft seal system for the motor with two (2) totally independent seal assemblies and Tungsten-Carbide seal faces and silicon carbide lower seal.

Minimum B-10 bearing life of 60,000 hours for the operating range of the pump.

D. Electric Motor

For wet well installation, motors shall be FM or UL listed, and be designed for Class I, Group D, Division 1 explosion proof.

Thermal overload protectors imbedded in the motor windings.

Dual moisture or leak sensors on the sealing chamber.

Motors shall be NEMA Design B, heavy-duty, high efficiency with Class B or F insulation. Motors shall be non-overloading over the entire operating range, with a nameplate horsepower rating a minimum of 20 percent greater than the maximum horsepower required over the operating range.

Motors located in a damp environment and in a dry pit shall have two (2) cycles of solid baked epoxy vacuum impregnation.

Motors shall be inverter duty if operated by variable frequency drives.

Motors shall be immersible, capable of operating continuously in air without the use of sewage pumped for cooling if installed in a dry well.

E. Painting and Coating

All Non-Stainless Steel, ferrous, wetted surfaces in contact with wastewater shall be coated with coal tar epoxy enamel. Surface preparation shall be in accordance with SSPC-SP5, white metal blast cleaning. Prime coat to DFT=1.5 mils, Amercoat 71, Engard 422 or equal. Two (2) or more coats, DFT=16 mils, Amercoat 78HB, Engard 464 or equal. Total system DFT=17.5 mils.

All Non-Stainless Steel, ferrous surfaces exposed to corrosive environment shall be coated and painted by amine cured epoxy. Surface preparation shall be in accordance with alkaline cleaned, SSPC-SP1. Prime coat and finish coat shall be three (3) or more, DFT=16 mils. Amercoat 395, Engard 480 or equal.

6.0.9 Valves and Gates

Valves shall be placed to prevent backflow, isolate the equipment from the system, to control hydraulic surges, and to drain the piping system during scheduled repair and maintenance. All valves shall be suitable for wastewater service.

All interior surfaces of valves in contact with wastewater shall be epoxy coated. All valves 10-inch diameter and larger shall be provided with motor operators. Manually operated valves located more than six (6) feet above the operating floor shall be equipped with chain wheel operators, with the chain extended to 36-inches above finished floor. Motor operated valves shall be provided with a manual hand wheel and manual push button station conveniently located below the valve, five (5) feet above finished floor.

6.0.9.1 Sluice Gates

Sluice gates shall be furnished with Stainless Steel frames and slides with embedded bronze seats, Type 316 Stainless Steel stem, and adjustable bronze bushed stem guides. Sluice gate manual operator shall have AWWA square nut; manual crank operator with floor stand and two (2) speed gear reducer designed for opening time of not to exceed six minutes. Motor operator shall be provided when required by the City Engineer. Motor operated gates shall be designed for opening and closing times of one (1) foot per minute.

Sluice gates shall be specified to be furnished with pattern wall thimbles to match the concrete thickness where the gate is to be installed.

Sluice gates shall be Rodney Hunt or approved equal.

6.0.9.2 Eccentric Plug Valves

Non-lubricated eccentric plug valves shall be used as isolation valves. Valves shall have hard rubber (suitable for sewage service) resilient faced plugs and flanged ends. Valve seats and discs shall be Stainless Steel, Type 316. Bodies shall be semi-steel with raised seats. Valves shall be of the bolted bonnet design. Valve design shall allow repacking without removing the bonnet, and the packing shall be adjustable. All exposed nuts, bolts, springs, and washers shall be Stainless Steel, Type 316. Valves shall have permanently lubricated Stainless Steel bearings in the upper and lower plugstem journals.

Manual valves shall have a two (2) inch square nut and lever actuator. Levers shall be field cut as required to be operable in their installed locations.

Eccentric plug valves may be used as pump control valve to alleviate hydraulic surges during normal starting and stopping of the pumps and as surge anticipators when required. These valves shall have hydraulic cylinder type operators with adjustable opening and closing times. Where the valve is used as a surge relief valve, emergency (upon failure of power supply) opening and closing times shall be specified.

Where space permits, all eccentric plug valves shall be installed with the shaft in the horizontal position. The orientation of the plug with respect to the fluid flow

direction shall be as recommended by the manufacturer. The valve manufacturer's recommended installation instructions to prevent clogging of the valves during extended shutdown periods shall be strictly followed.

Valves shall have unobstructed port area of not less than (eighty (80) percent of total pipe area.

Eccentric plug valves shall be as manufactured by DeZurik Corporation, Keystone, Drum-Owens (Homestead), Milliken, or approved equal.

6.0.9.3 Ball Valves

When required by the City Engineer, ball valves shall be used as pump control valves or for surge relief where flow characteristics require the valve trim that would match that of the ball valves.

Small diameter ball valves (3/4-inch to 2½-inch diameter) shall be used as isolation shut off valves for potable or pump station water system.

All ball valves shall be in accordance with ANSI/AWWA C 507, with Cast Iron, Ductile Iron, Cast Steel, or Stainless Steel bodies, support legs or pads, flange ends, suitable for velocities up to 35-fps, temperatures up to 125 degrees F, and design pressures to 150 or 250 psi depending on the pressure range required by the system. The balls shall be Cast Iron, Ductile Iron, Cast Steel, or Stainless Steel, shaft or trunion-mounted, with tight shut-off, single or double seat, and full bore. The valves shall be rubber, with Stainless Steel or monel shafts, and have at least one (1) thrust bearing. Except for Stainless Steel, ferrous surfaces of valves in contact with wastewater shall be minimum sixteen (16) mil epoxy-coated.

Ball valves shall be as manufactured by Jamesbury Corporation, Wm. Powell Company, or approved equal.

6.0.9.4 Check Valves

Check valves shall be installed at each pump discharge piping to prevent backflow of wastewater (which can cause severe damage to the pump impeller and shaft) and recirculation of flows back to the wet well in stations with multiple pumps. Valves shall comply with the requirements of AWWA C508.

Check valves shall be the outside lever and weight swing type check valves. They shall be installed in the horizontal position to prevent accumulation of solids downstream of the valve, which can cause clogging of the valves.

Swing check valves shall have a flanged cover piece to provide access to the disc. The valve body, cover, and disc shall be cast iron conforming to ASTM A 126 Grade B. Disc facing shall be rubber conforming to ASTM D2000 2BG715. Seat ring and clapper arm shall be cast bronze conforming to ASTM B584 Alloy C 84400. Clapper arm shall be clamped to the hinge pin with Stainless Steel screws and jam nuts.

Ferrous surfaces of valves in contact with wastewater shall be minimum 16 mil epoxy coated.

Swing check valves shall be as manufactured by APCO Valve and Primer Corp., Kennedy, Crane Company, or approved equal.

6.0.9.5 Sewage Surge Relief Valves

The necessity for surge control devices shall be determined through a complete surge analysis of the pumping system. Although surge tanks are the most reliable means to alleviate damaging surges in the forcemains, sewage surge relief valves may be required by the system. Where surge relief valves are required, the valve shall be installed in the discharge piping manifold and connected to the wet well. The valve shall be designed to open immediately when the system pressure exceeds the load setting of the counterweights and shall close slowly upon return of normal system pressure. Speed shall be externally adjustable.

A. Main valve body shall be of cast iron conforming to ASTM A126 Class B, with integral flanges, faced and drilled per ANSI B16.1 Class 125. The valve body shall be inherently selfcleaning and have a net flow area through the valve no less than the area of its nominal pipe size. The body shall have a removable 316 Stainless Steel body seat.

B. The valve disc shall be cast iron or steel with a renewable, resilient seat. The valve stem shall be Stainless Steel bushing retained in the valve cover.

C. An integral hydraulic system shall permit quick opening and adjustable, slow closing without the need of pre-charged cylinders. The valve shall be fully capable of operating in any position.

D. Provide NEMA 1, 4, 13 rated SPDT limit switch to indicate when the valve is open or closed.

Sewage surge relief valves shall be as manufactured by APCO Valve and Primer Corporation, or approved equal.

6.0.9.6 Sewage Air Release Valves

Sewage air release valves shall **not** be used unless absolutely necessary. The design engineer shall endeavor to provide a system which rises continuously from the pump station to the discharge point. Where absolutely necessary, sewage air release valves shall be provided to vent accumulating air or gas during pumping operation or entrapped during initial operation. Air release valves shall be installed at high points of the piping systems. Entrapped air or gases can reduce pumping capacity of the pumping system or cause corrosion of the piping system with gases containing hydrogen sulfide. The air or gas vent located at the pump station shall be discharged to the wet well.

The valves shall have long float stems and bodies to minimize clogging. Each valve shall be furnished with backwashing accessories to remove solids accumulated inside the valve. An approved water supply and connection shall be

provided with appropriate cross connection control device(s) near the valve for backwashing.

Sewage air release valves shall be as manufactured by APCO Valve and Primer Corporation, Val-Matic Valve Manufacturing Corporation, or approved equal.

6.0.10 Potable Water Backflow Prevention/Cross Connection Control

Approved backflow preventers shall be installed where utility water or plant water is connected to the potable water supply to prevent contamination of the potable water system. Drain lines and air gaps shall be provided. All backflow preventers shall be registered with County Health Department and must be approved for use in the Camarillo Sanitary District.

6.0.11 Magnetic Flow Meters

Each pump station shall be equipped with metering equipment to measure outlet flow and provide flow signal for recording, totalizing and control of other equipment. In addition, the flow meter shall be used for pump field performance test to measure capacity and efficiency. The meter shall be magnetic type suitable for wastewater service and equipped with a bypassing system where the flow meter can be removed and replaced without disrupting the process.

Magnetic flow meters shall be provided at the pump station discharge manifold capable of metering the full range of flow with an accuracy of ±1 percent of flow rate from ten (10) to one hundred (100) percent of scale. At a velocity below one (1) foot per second, the accuracy shall be ±0.1 percent of the full scale. The meter shall be installed in the piping manifold with minimum straight approach of four (4) and two (2) times the inside diameter, upstream and downstream, respectively.

The size of the flow meter shall be selected to cover the entire velocity range expected.

The magnetic flow meter shall utilize characterized electromagnetic induction to produce a voltage linearly proportional to the average flow rate. The metering system shall consist of a sensor with field coils, transmitter and interconnecting cables to make a complete operating flow metering system. The meter shall be bipolar pulsed dc type with continuous automatic zeroing.

The sensor shall be flange tube with non-conductive liner. The tube shall be constructed of Type 316 Stainless Steel with carbon steel flanges AWWA Class D if the coils are external to the tube. The sensor rating shall be NEMA 4, and capable of withstanding accidental submergence in water to a depth of thirty (30) feet for forty eight (48) hours. The meter shall include a positive zero feature for periods when the metering portion of the process pipe is not full.

Liner material shall be neoprene, except for liquids that may deposit nonconductive coatings, which shall have Teflon linings. The specific conductivity of the liquid shall **not** preclude meter operation.

Grounding electrodes shall be of the same material as the sensing electrodes and shall be furnished mounted on each end of all flanges.

Transmitters shall be provided for either local or remote indication as required for each particular project. Remote transmitters shall be NEMA-4X enclosures suitable for wall mounting. Transmitters shall produce a 4-20 madc output signal into a minimum load of 800 ohms linear flow, and a scaled pulse for totalization. All electrical equipment furnished with the magnetic flow meter shall carry a UL label.

Magnetic flow meters shall be Tigermag manufactured by Sparling Instrument Co., Inc. or approved equal.

6.0.12 Piping and Support System

The pump station piping and supports system consists of the gravity sewer, pump suction and discharge piping, station water or utility water piping, potable water piping, air piping, sanitary drainage piping, fire protection, and sprinkler piping systems. Most of these piping systems are adequately specified by the applicable sections of the Uniform Plumbing Code, Fire Codes and the Standard Specifications for Public Works Construction.

This Section includes special requirements and recommended practices involving the design of piping and the support system.

6.0.12.1 Piping

A. Materials

1. Piping inside the wet well shall be Stainless Steel, Type 316. Ductile Iron pipe shall be used for discharge piping outside the wet well, discharge manifolds and forcemains as specified in Section 2.4, and water piping 2½ inch and larger. Ductile Iron pipe shall be in accordance with SSPWC 207-9.2 Ductile Iron Pipe for Water and Other Liquids, and ANSI A21.5l (AWWA C151). All internal surfaces of Ductile Iron pipe and fittings for water service shall be cement mortar lined and sealed with bituminous coating in conformance with AWWA C104. Internal surfaces of Ductile Iron pipe for sewer service shall be lined with minimum 40 mils ceramic epoxy (PROTECTO 401). Unless otherwise specified, all joints of Ductile Iron pipe shall be 125-lb flange in conformance with ANSI B16.1, B16.2 and A21.10 (AWWA C110). Sleeve type couplings shall be provided between the wet well and the valve vault, and at the outlet of the valve vault. Groove type couplings shall be provided in the valve vault to allow removal of the equipment for maintenance.

2. All Nuts and Bolts shall be of Type 316 Stainless Steel per ASTM A 193 Grade B8M. All nuts shall be provided with a washer of similar type. The bolt end shall project ¼ inch to 3/8 inch beyond nut.

3. Groove type couplings shall **not** be used for underground installation. Mechanical groove type couplings shall be as manufactured by Victaulic, or equal.

4. Sleeve-type couplings shall conform to AWWA

Standard C 219, fabricated of steel with 316 Stainless Steel nuts and bolts and with sizes to fit outside diameter of the Ductile Iron pipe. The middle ring shall not be less than ¼ inch in thickness and minimum seven (7) inches long. The follower shall be single piece contoured mill section, welded, and cold expanded, as required for the middle rings. The coupling shall be equipped with a gasket to make the joint watertight. The coupling shall be factory epoxy coated suitable for sewer service.

Sleeve couplings shall be installed in the piping systems subject to differential settlement. Two (2) sets of sleeve couplings shall be installed with spacing as recommended by the coupling manufacturer.

Where sleeve couplings are installed in the piping system subject to thrust loads, the coupling shall be provided with restraints. Restraint design shall be in conformance with AWWA Design Manual M-11.

Sleeve-type couplings shall be as manufactured by Smith-Blair, Dresser or equal.

B. Discharge Pipe

The discharge pipe shall meet the following requirements:

1. Discharge pipes shall be sized for a minimum velocity of three (3) feet per second and a maximum velocity of five (5) feet per second.

2. The discharge pipe shall be connected to the discharge header at an angle of forty-five (45) degrees.

3. A pressure gauge capable of measuring the entire range of pressures expected shall be installed on the discharge nozzle or as close to the pump as possible.

   The gauge shall be installed on a ½ inch NPT diameter pipe tap with a ball isolation valve and chem seal with snubber.

6.0.12.2 Pipe Support Systems

All piping systems, including connections to equipment, shall be designed with proper support to prevent undue deflection, vibration, and stresses on piping, equipment, and structures resulting from normal operation and seismic events. All supports and parts thereof shall conform to the requirements of ANSI/ASME B 31.1 except as specified herein.

Ductile Iron pipe of any size shall have a minimum of two (2) supports per straight length not to exceed ten (10) feet of unsupported span. One of the supports shall be located at the joint.

Where the piping system is subject to thrust as a result of hydraulic surge or actuation of a surge relief valve, a thrust support or a hydraulic shock suppressor shall be provided.

All pipe supports shall be galvanized after fabrication. Pipe supports shall have a minimum of 1½ inch thick dry pack between the floor and the support base.

6.0.13 Ancillary Equipment

Each pump station shall be designed to provide the necessary ancillary equipment to support the operation and maintenance of the facility.

6.0.13.1 Ventilation, Air Conditioning, and Odor Control Systems

A typical submersible pump station consists of the wet well, valve vault, and the electrical and control room. The wet well in a submersible pump station need not be provided with a ventilation system unless specifically required by the City Engineer. Wet wells of wet well-dry well type pump station will be ventilated as specified in this subsection.

The ventilation and air conditioning system and odor control systems shall be designed and controlled as one integrated system. Air distribution, building enclosures, wall penetrations, wind directions, building occupancies, and area classifications shall be carefully investigated. Ventilation and air conditioning systems shall be designed in accordance with the American Society of Heating, Refrigerating and Air Conditioning Engineers (ASHRAE), State of California Energy Conservation Standards Title 24 and the NFPA 820 Fire Protection in Wastewater Treatment Plants.

Equipment conveying corrosives shall be of material that is corrosion resistant, such as Fiberglass Reinforced Plastic (FRP) or Stainless Steel. If FRP ductwork is used, it shall have flame spread of less than 25, and a smoke propagation of less than 400, and be of fire resistant rating. Air containing flammable and explosive vapors or toxic gases shall **not** be recirculated.

Air conditioning may be required for pump stations with VFD's.

Depending upon classification, motors for supply and exhaust fans shall be explosion proof, totally enclosed fan cooled (TEFC) units.

6.0.13.2 Wet Well Ventilation

In order to minimize accumulation of gases inside the wet well in a wet well-dry well type pump station, the wet well shall be flushed with fresh air by an adequately sized ventilation system.

Ventilation rates shall be in accordance with:

1. NFPA 820 Fire Protection in Wastewater Treatment Plants

2. Occupational Safety and Health Act (OSHA)

Wet wells shall be provided with adequate fresh air ventilation in order to provide a safe environment for maintenance personnel, to prevent accumulation of explosive gases, and to minimize corrosion of equipment installed in the wet well. The internal surfaces of the wet well shall be lined with PVC for corrosion protection.

The following minimum ventilation criteria shall be used:

1. All accessible wet wells shall be provided with continuous ventilation of a minimum of fifteen (15) air changes per hour.

2. Where intermittent ventilation is required, the ventilation rate shall be at least thirty (30) air changes per hour.

All electrical equipment and fans inside the accessible wet well shall be explosion-proof designed and manufactured for Class I, Division I, Group D. All other design criteria shall be in accordance with NFPA 820 Fire Protection in Wastewater Treatment Plants.

6.0.13.3 Odor Control

Wet well odor control equipment shall provide both ventilation and odor control and consist of either a water misting odor control system or an activated carbon odor control system.

The water misting water supply shall be from a dedicated tank through a misting pump. All piping shall be Schedule 80 PVC. The number of spray nozzles shall be determined for each facility, but shall **not** be less than four (4). Pipe anchors inside the wet well shall be Stainless Steel, Type 316.

The activated carbon system shall be as manufactured by Calgon Carbon Corporation or equal.

Odor control system design shall be as approved by the City Engineer and utilize manufactures system design similar to that which is successfully demonstrated in other wastewater facilities by pilot testing or full scale operational data.

For air pollution permits, consult South Coast Air Quality Management District.

6.0.13.4 Equipment Room and Valve Vault Ventilation

Equipment rooms, if any, shall be designed for a ventilation rate of at least fifteen (15) air changes per hour or ventilation rate equivalent to cool internal heat load from the equipment, whichever is greater, or not greater than 60 air changes per hour. The sensible cooling ventilation rate shall be calculated as follows:

$$H = cfm \times 1.09 \times t$$ Where:

H:	Internal heat gain from equipment, Btu per hour
cfm:	Air flow, cubic ft per minute
t:	Change in internal temperature, degree F. Use 10 degrees F for change in internal temperature as adequate for sensible cooling

Valve vaults shall be equipped with exhaust fans providing at least twelve (12) air changes per hour.

Where a pump station is equipped with variable frequency drives (VFD), the VFD shall be installed in an air conditioned area with ninety (90) percent efficient outside air filters. For constant speed pump stations, the motor control center (MCC) and control rooms shall be equipped with a ventilation fan and 90 percent efficient outside air filters.

Pump and equipment room air inlets shall be provided with thirty (30) percent efficient outside air filters.

All air filters shall be provided with differential pressure gages to indicate when the filters are clogged, and flow detection devices connected to alarm signaling systems to indicate ventilation system failure.

6.0.13.5 Fire Protection System

Where required by NFPA or by the Fire Department, necessary fire protection systems shall be provided in required areas. For areas housing electrical equipment such as the motor control centers, computer rooms and control rooms, an approved type fire protection systems shall be provided.

6.0.13.6 Compressed Air System

For pump stations using surge tanks, air operated valves; pneumatic tools for maintenance purposes, and instrument air, a compressed air system shall be provided. The air system for pneumatic tools shall consist of a lubricated type air compressor, receivers, air dryers and necessary piping system. For an instrument air system, a dedicated non-lubricated type air compressor, receiver, dryer and necessary piping system shall be provided. Where the valve operators are designed as pump control valves with the option to have controlled closing during power failure, the air receivers shall be sized to store compressed air capable of stroking the air cylinders three (3) complete cycles between the specified operating pressures during power outages.

6.0.13.7 Hydraulic System

Pump stations equipped with hydraulic operated valves shall be provided with hydraulic systems. The hydraulic system shall be either a package system supplied with each valve, or one complete package to operate multiple valves. The system shall consist of an oil reservoir, hydraulic pumps, control valves, hydraulic cylinders, limit switches and nitrogen gas-filled accumulators where the valves are required to operate during power outages. The valve opening and closing ranges shall be specified. Final field adjustments shall be made during pump station start-up.

6.0.13.8 Noise Control

The pump station shall be designed to meet the minimum noise level requirement of the Municipal Code of the local jurisdictional agency and the Occupational Safety and Health Administration (CAL/OSHA). All mechanical equipment and enclosures shall be acoustically treated to bring the noise level down to an acceptable limit. The attenuation devices may consist of exhaust mufflers, sound isolators or acoustical panels.

The pump stations shall be designed with noise levels **not** more than five (5) dBA above the ambient noise level as measured at the property line of the nearest recipient (neighbor). A twenty-four (24) hour noise level reading shall be measured at the pump station site as basis of the design.

In the absence of actual field measurements, the presumed ambient noise level shall be deemed to be the minimum ambient noise level for each zone as follows

Sound Level "A" Decibels
(In this chart, daytime levels are to be used from 7:00 A.M. to 10:00 P.M. and nighttime levels from 10:00 P.M. to 7:00 A.M.)

Presumed Ambient Noise Level (dBA)

Zone	Day	Night
Residential	50	40
Public Facility, Commercial, Recreational	60	55
Industrial	65	65

At the boundary line between two zones, the presumed ambient noise level of the quieter zone shall be used.

6.0.13.9 Sump Pumps

A sump pit shall be provided in all underground structures such as dry wells, valve and electrical vaults. The sump pit shall be equipped with an adequately sized plus a standby submersible pump, each having a minimum capacity of fifty (50) gpm in dry wells and electrical vaults, and one sump pump in valve vaults. Submersible sump pumps for dry wells and electrical vaults shall be controlled by a duplex type control, an automatic alternator and a float switch level control. The control system shall be designed to start the standby pump when the lead pump fails to start or when the water level continues to rise while the lead pump is operating. Both pumps shall stop at low water level.

The sump pump for valve vaults shall be controlled by a float switch.

Sump pump discharge pipe, fittings and valves shall be Schedule 80 PVC pipe, with minimum diameter of two (2) inches. Each sump pump discharge pipe shall be provided with a swing check valve and isolation gate valve mounted above, both in the vertical position. The discharge pipe shall terminate inside the wet well with the wall penetration above the highest surcharge elevation of the wet well.

6.0.13.10 Spare Parts

Pump station electro-mechanical equipment shall be provided with spare parts necessary to ensure continuous operation. The recommended spare parts shall be determined by the project design engineer with assistance from the City Engineer. The following shall be the minimum list of spare parts:

1. One set of pump and motor bearings for each size and model of pump unit;
2. One set of pump seals for each size and model of pump unit;
3. One set of pump and casing wear rings for each size and model of pump unit;
4. One set of pump and motor for each size and model of pumping unit;
5. One dozen fuses for each size of fuse;
6. A printed circuit board for each size and model of the variable frequency drives.

The spare parts shall be delivered to the project site no later than two (2) months prior to pump station start up. Spare parts required during testing and start-up shall be provided by the Contractor.

6.0.14 Electrical Equipment

Electrical systems in the pump station consist of but not limited to the power supply, power transformers, motor control centers, electric motors, electric drives, Programmable Logic Controller (PLC), telemetering, transfer switch, electrical wires and conduits, lighting fixtures, and other associated interface with the instrumentation and control systems.

Free standing electrical service and transfer switch will be heavy duty electrical weatherproof enclosure securely mounted in a manner acceptable to the City Engineer, a minimum of 24-inches above the ground. Provide concrete pad around steel supports. Enclosure equipment to be factory primed and painted as provided by Square D, Cutler-Hammer or equal. All hinges and hardware shall be 316 Stainless Steel.

6.0.14.1 Power Supply

The standard power supply to the pump station shall be 480 volts/three (3) phase.

6.0.14.2 Motor Control Centers (MCC)

All motor starters and disconnect switches shall be installed in NEMA 3R Motor Control Centers (MCC). MCC shall be located away from hazardous gas or other corrosive environments. Mechanical ventilation equipment shall be provided to maintain air circulation. All fresh air inlets to the MCC enclosures shall be provided with 90 percent efficient inlet filters.

Where environmental problems exist in the pump station location, such as the presence of dust, moisture from seawater, or corrosive gas, the MCC enclosure shall be designed to have adequate ventilation and provided with the necessary air cleaning equipment.

The MCC circuit breaker handles must be provided with safety interlocks.

6.0.14.3 Electrical Cables and Conduits

All electrical cables and conduits shall be designed in accordance with the NEMA Area Classification as required by the service area. All electrical conduits shall be PVC coated galvanized rigid metallic conduits or Schedule 80 PVC. All conduits shall be sized for one hundred (100) year service. Spare conduits may be required. The minimum size conduit shall be one (1) inch.

All electrical connections for pumps will be made outside of the wet well within a junction box.

6.0.15 Instrumentation and Controls

The instrumentation and control system shall be designed to operate the pump station to match the flow characteristics of the service area. The control system shall consist of PLC, telemetering, wet well level control, flow metering equipment, pressure gages and switches, and fire alarms.

6.0.15.1 Pump Control System

General

The pump control panel (PCP) shall provide manual or automatic control of the pumps, as well as visual indication of the pump station status and alarm conditions. The following status and alarm indicators shall be provided as a minimum:

Status	**Alarm**
Power ON Light	Wet Well HIGH LEVEL Alarm Light (from Ultrasonic level sensor)
Running Time Meter	Wet Well High High Level Alarm Light (from float switch)
Pump RUN	Pump FAIL Alarm Light
HAND-OFF-AUTO selector switch	Motor winding HIGH TEMP Alarm Light
Lights Test Pushbutton	Seal FAIL Alarm Light
Seal Test Push Button (for submersible pumps)	FAIL RESET pushbutton
Flow Rate Indicator	Intrusion Alarm Light
Wet Well Level Indicator	Generator FAIL Alarm Light
Discharge Pressure Indicators	Pump Station Low Flow
Intrusion Alarm Switch	Valve Vault/Dry Well FLOODED Alarm Light
	Pump Excessive Cycling

The pump(s) may be controlled either manually, or automatically, depending upon the position of the pump hand-off-auto selector switch. In the MANUAL mode, a pump shall be started by placing its hand-off-auto selector switch in the HAND position. In this mode, the pump will run continuously unless shut down by the "fail" interlocks.

In the AUTO mode, the pump shall start and stop by the wet well level, as measured by an ultrasonic level sensor. In the AUTO mode, the pump will run until called to stop by wet well level, unless shut down by the "fail" interlocks.

If the operating pump should fail, the next pump in the call sequence will start and operate each time the wet well level calls for a pump operation until the failed condition is cleared.

The pump controller shall be a solid-state device, which provides operational set points, high-level alarm, and outputs to start and stop the pumps.

A float switch shall be installed in the wet well to provide an emergency high-level alarm and a back up pump control system for the station. The emergency high level shall be indicated on the pump control panel and through the SCADA. In this condition, the pump will operate for an adjustable time (zero (0) five (5) minutes after emergency high-level initiation), as set by the operator, and then will shut down.

If the wet well level again rises to the emergency high level, the cycle will be repeated. The station shall run indefinitely in this mode if necessary.

A "pump fail" alarm (for each pump) will be indicated at the pump control panel and transmitted to the SCADA alarm system should any of the following conditions occur:

1. Pump motor winding high temperature detected by sensors in the motor winding;

2. Motor overload detected by the overload relay;

3. Motor seal failure.

Excluding the Motor Seal Failure, all of the above "fail" conditions will lockout the pump from operation. To reset a pump, the operator must visit the station, determine the cause of failure, correct the condition, and depress the "fail reset" pushbutton on the pump control panel.

For submersible pumps, motor seal failure alarm shall **not** stop pump operation.

Drives

Drives will be Allen-Bradley or approved equal and provided with solid state smart type motor starters with a pump control option used to provide ramp starting and stopping of motors. The controller will have the following start modes: soft start with selectable kick starts, current limit, and full voltage.

Constant Speed

The operating sequence is applicable for multiple pump units installed in a smaller wet well. The pump station will start in sequence, pumps start and stop in the reverse order.

Variable Speed

Variable speed pumps shall be used for the following conditions:

1. Where more uniform discharge to the receiving system is required;

2. Where there is not enough space in the pump station to accommodate installation of multiple smaller unit constant speed pumps;

3. Where the wet well volume is limited to satisfy maximum starts per hour;

4. Where sewer gas emissions to the atmosphere should be limited.

The variable speed drive pumps shall be controlled as follows:

1. When the wet well level reaches the first set level, the lead pump will start and ramp to a minimum preset speed. As the flow increases, the pump speed will increase in proportion to the increase in flow in order to maintain the level in the wet well until the pump has reached its maximum speed.

2. When the inflow to the wet well exceeds the maximum capacity of the lead pump, the control system will then start the lag pump. The lag pump will increase its speed while the lead pump will decrease its speed up to the point where the two pumps share the flow, both at the same speed. As the inflow increases, the two pumps will increase their speeds in proportion to the inflow until the pumps have reached the maximum pump design flow, in the case of two (2) pump combination.

3. A drop in wet well level equivalent to a decrease in pump station inflow will signal the pumps to slow down until a preset speed is reached. Then the lag pump will stop, and the lead pump will increase its speed in proportion to the inflow.

4. Further drop in wet well level will signal the lead pump to slow down until the minimum level is reached, at which time the lead pump will stop.

5. In the event that either the lead pump or the lag pump fails, the wet well level will rise and the standby pump will be started at the same time the failure alarm is activated. The standby pump will be provided with a variable speed drive.

For pump stations equipped with more than two variable speed pumps, the same operating sequence will be followed.

Under no conditions will a forcemain velocity of less than three (3) feet per second shall be allowed.

The variable speed drives shall be provided with bypass contactors to operate the pump at full speed when the VFD is not available.

Float Level Switch

The float level switches shall be used to detect the low-low level cutoff and the high-high water level alarm, and as an auxiliary system in the event of failure of the ultrasonic level control systems. When the water level in the wet well reaches the high-high level, the control system shall initiate a timed pump down using two pumps.

The pump station shall be capable of operating indefinitely in this mode. The float switch shall be direct acting with a single pole mercury switch, which activates when the longitudinal axis of the float is horizontal and de-actuates when the liquid level falls one (1) inch below the actuation level. The switch shall be encapsulated in a chemical resistant, polypropylene casing, with a firmly bonded electrical cable protruding. The entire assembly shall be watertight and impact resistant designed and manufactured for Class 1 Division 1, Hazardous Conditions. Float switches shall be Roto-Float, as manufactured by Anchor Scientific or approved equal.

Submersible dewatering sump pumps, located in valve vault and structures, shall be controlled by float switches. Float switches shall be designed and manufactured suitable for the area classification of the sump pit.

Ultrasonic Level Control

The pump station's primary level controller shall be the ultrasonic level sensor. The transducers shall be hermetically sealed, self-cleaning with built-in temperature compensation six (6)° beam angle, suitable for installation in a sewage pump station wet well.

Ultrasonic measuring systems shall be the Hydroranger with XPS-15 transducer as manufactured by Milltronics, or approved equal.

6.0.15.2 Telemetry

Scope

Whenever a new site is incorporated, or an existing site's control system is replaced or the majority of it modified, the control system shall be designed in accordance with the standards set out in this document.

Philosophy of Operation

This section defines the general control and monitoring philosophy for the control room. Basic guidelines for control system hierarchy from local equipment control methods to the top level of operator interface are defined.

Operation of Facilities

The control room will use SCADA system primarily for monitoring the status of remote sites. All the pump control strategy shall be executed at the remote site. The SCADA alarm-paging interface will send designated alarm messages to on-call personnel 24 hours per day.

Control Hierarchy

Process control systems must be organized in a logical control hierarchy in order to provide a standard format for monitoring/control of the overall facility. This standard approach provides operators and maintenance staff a uniform interface that improves their understanding of how to monitor/control the equipment, the control modes the equipment can attain, and how to override the controls when necessary due to failures or when required for routine maintenance.

The control system hierarchy can be viewed as a pyramid structure with three layers:

1. Field sensors and specific control devices (bottom layer):

    - All control and monitoring must originate and terminate at this level. All the components specified at this level can be interfaced with the local PLC.

2. Local PLC control/monitoring:

    - All sewage pump stations local PLC will be primarily used for monitoring only. In some instances especially on bigger pump stations it may be used for control and monitoring. PLC for pump station shall have the capability to control the pump station if required with minor changes.

    - PLC's shall be furnished completely configured, programmed and tested providing the specified communication, monitoring, display, input/output, annunciation, computational and other requirements for operation of the SCADA system. Any additional components required for operation, whether specifically referenced herein or not, shall be provided.

    - The PLC system shall be based on a scalable modular multi-use open architecture platform that can be efficiently applied to perform the necessary functions at each location. Each controller/telemetry unit shall be a modular hardware style PLC consisting of a CPU with adequate memory and instructions, power supply, local and remote input/output modules, communications ports, and all other components required to make the unit perform all of the functions required in this specification.

    - The PLC system shall support true system open architecture allowing use of various hardware and software and full integration

of other third party generic hardware/software devices. The architecture shall meet the requirements as herein defined and allow economical expansion of function and features based on new and evolving technologies. Systems using nonscalable and/or closed proprietary architectures shall **not** be acceptable.

3. SCADA monitoring/control:

- Control at this level shall be based on operators using SCADA to monitor and control the remote sites. At least one SCADA server/node shall be located in the Control Room as a central point for the generation of alarm reports, historical data archiving and retrieval, scheduled reports, and system maintenance.

6.0.15.3 Remote Station Hardware and Software

General

PLC system for SCADA system shall be based on an existing data concentrator PLC at utilities office and a PLC at each remote pump stations. Data concentrator PLC is an Allen Bradley SLC 5000 PLC with Ethernet processor. The primary functions of data concentrator PLC is poll the remote sites over radio network and collect data from each site. This data typically includes wet well level, station flow, run time and run counts for all the pumps, power and generator status, alarms etc. Communication failure with remote PLC shall create an alarm for SCADA. Data concentrator PLC shall also synchronize PLC clocks at the remote pump stations.

PLC Panels

PLC Panels shall be NEMA 4X, enclosures. Enclosures shall be provided with swing out panels to allow mounting the local operator interface units (OIT) inside the enclosure. PLC panels shall have individual circuit breakers for each device in the panel. PLC panels shall also be provided with uninterruptible power supplies (UPS) to back up the PLC and telemetry hardware for at least one (1) hour of power loss.

PLC Hardware Requirements

PLC at remote sites shall be from Allen Bradley Logix family with adequate memory and instruction sets required to make the unit perform all of the functions required by this specification. It is required that the same model PLC device be used throughout the SCADA system providing a complete solution with one common technology. This is to insure complete system continuity, compatibility between like devices, enhancing overall system efficiency by the reduced need to learn, maintain, support and carry spare parts for multiple technologies.

All control signals, status signals, alarm and process variable data shall be transmitted and received between the central location and the remote sites via the radio network. The master and remote PLCs shall be capable of stand-alone control to maintain programmed logic. Remote pump stations PLC's shall be provided with 120 VAC discrete input modules and relay output modules. Analog

input and output modules shall be provided with 4-20 mA range. Actual I/O count will vary from pump station to pump station.

PLC Communication Options

The PLC's shall be supplied with minimum two (2) RS-232 communication ports. The ports shall support DF1 and MODBUS protocol as minimum.

The signal to the central station shall be transmitted over broad band spectrum radio (as manufactured by Data-Link).

PLC software

PLC's shall be programmed with Allen Bradley RSLogix 5000 software.

Local Operator Interface Unit (OIT)

Each remote station shall have local operator interface unit (OIT's). These units shall be Allen Bradley Panelview 1000 or better. For wastewater pump stations OIT's shall display wet well level, station flow, pump run times and pump run counts. OIT's for wastewater stations shall allow full control of pumps and other auxiliary equipment, entering various process set points, pump status, run times and run counts etc. OIT's shall also display current alarms and alarm history. Operator can delete the alarm history.

6.0.15.4 Communication

Data concentrator PLC at the Control Center shall communicate with remote site over radio network. Radio network is formed using DataLink radios, utilizing the Broadband Spectrum in the ISM Band of 902 – 928 MHz to provide reliable long range data transportation at up to 115.2 kbps. The Data-Link radios provide transparent data communications for nearly all SCADA/Telemetry protocols.

6.0.16 SCADA Software

General

At present, the Camarillo Sanitation District is using RS-View 32 software for wastewater SCADA system. RS-View 32 is a powerful Client/Server based HMI/SCADA solution that provides process visualization, data acquisition and supervisory control over manufacturing and production processes. RS-View 32 gives Operators and Process Engineers the power and security to precisely monitor and control every aspect of their process, equipment and resources. The result is a faster response to production issues, with improved quality, and reduced waste.

The SCADA system is based on PCs running Windows 7 as the operating system RS-View 32 software is very suitable for implementation of *clientserver* architectures. Any remote client workstations will also run Windows as the operating system, and client functions will be provided by means of client software from RS-View 32. Networking at sites will be accomplished by means of an Ethernet Local Area Network (LAN). This new system will allow the District to expand the system to add new sites with ease.

Any new Pump Station added shall be added to the existing SCADA system.

Following additions shall be provided for each new site:

Graphical display screen indicating status of pump stations. Wastewater pumping stations screens shall show the instantaneous station flow, wet well level, pump run times, pump run counts, pump status etc., power status, generator status, etc. Running pump status shall be shown in green color and stopped pump status shall be shown in red color. Opened valves shall be shown in green color and closed valves shall be shown in red color. Pump and valve failures and alarm conditions shall be shown in a blinking red.

SCADA shall be configured to display real time trends of various parameters. For wastewater pumping stations such parameters shall typically include wet well level and station flows. A minimum of four variables may be trended in the Trend window at a time. All the real time data shall also be achieved for producing historical trends. The operator shall be able to scroll backwards and forwards in time for the complete period of data storage without entering dates and times, etc. Data for historical trends shall be stored for minimum of six (6) months.

SCADA shall display process and systems alarms read from data concentrator PLC. Each of these alarms shall be prioritized in the SCADA as per their importance. For example, high wet well level or station power failure shall have highest priority. Alarm screen shall have soft button for operator to acknowledge alarms. Active, Inactive, Acknowledge and Unacknowledged alarms shall be identified with different colors.

Following is a typical list of alarms for wastewater pump stations:

Pump # 1	Pump # 2	General Alarms
Switch in Auto	Switch in Auto	Starter Panel Power Failed
Run Failure	Run Failure	Generator Failed
Motor Start	Motor Start	Wet well level high
Motor Running	Motor Running	Communication Failure
Over Temperature	Over Temperature	Intrusion
Seal Failure/High Moisture	Seal Failure/High Moisture	
Overload Tripped	Overload Tripped	

SCADA system shall display telemetry status for every pump station. Any communication failures shall be displayed on the telemetry screen and shall create alarm in SCADA. SCADA will display and archive the up time and down time of each site for at least three (3) years.

SCADA system shall have the capability to log important pump station data in ODBC compliant database such as MS SQL Server. SCADA system shall provide reports of pump station data as per the requirements of operators.

6.0.17 SCADA Modifications

The system integrator shall create new SCADA screens for the new pump stations. Screens shall be similar in nature to the existing screens. Graphic screen shall implement graphical display of all set point, instrument readings, equipment status and control states. Update any automatically generated reports or trends affected by the addition of the new Pumping Station to the SCADA system. This also includes any update to the SCADA software. The Systems Integrator shall provide the RTU and associated components.

6.0.18 Pressure Gauges

The submersible pump station pressure gauges shall be installed at the discharge side of each pump in the valve vault, upstream of the check valves. The pressure gauge shall be at least 4½ inches in diameter. The pressure shall be indicated in the pump control panel.

A pressure switch shall be provided between the pump and the check valve or pump control valve to activate an alarm in the event of failure of the valve to open or accidental closure of any isolation valve located at the pump discharge piping. A micro-switch attached to the valve shaft may be provided in lieu of the pressure switch.

All, pressure gauges and switches installed in a piping system carrying solids bearing fluids such as wastewater, sump pump discharge or chemical lines shall be provided with diaphragm seals and snubbers where pulsating flow is expected. The assembly shall be provided with an isolation ball valve for maintenance. Diaphragm seal material shall be compatible with the pressure and fluid being handled.

6.0.19 Pump Station Facility

The pump station facility includes the pump station structure, buildings, electrical substation or transformer, access roads, and other appurtenant equipment inside the property. The facility design shall incorporate access road and security. The architectural treatment shall blend with the surrounding area.

Building Design and Materials of Construction

The pump station will usually consist of an underground reinforced concrete structure to house the wet well. Where the pump station requires an above ground structure to house the electrical room, generator room, office area and maintenance shop, the above ground building shall be designed in accordance with the requirements of the Uniform Building Code and California Fire Code. In general, all buildings shall be cast-in-place concrete or masonry block wall construction.

Wet Well:

The wet well shall be reinforced cast-in-place concrete with wall thickness to withstand the earth, seismic, and traffic loads, and shall be heavy enough to resist floatation without earth skin friction resisting the outside surfaces when the wet well is empty.

The size and configuration of the wet well shall be designed in accordance with Section 6.0.4. The bottom of the wet well shall be sloped to at least 15 degrees and corners grouted to prevent accumulation of solids during operation.

Valve Vault:

The valve vault shall be designed to provide the following:

1. Wall thickness to withstand the earth, seismic and traffic loads;
2. Minimum of thirty (30) inch clear working clearance between valves and piping;
3. Access doors, stairways and landing;
4. Access opening for equipment installation, maintenance and removal;
5. Hoisting equipment or lifting hooks;
6. Adequate ventilation;
7. Adequate dewatering system;
8. Fire protection equipment where required.

6.0.20 Forcemains

The size of a sewer forcemain shall be determined during the design phase of the project based upon a comparative study of the construction cost and pumping costs for several alternative sizes. In no case shall a forcemain be less than four (4) inches in diameter, unless authorized by the City Engineer. The capacity of the forcemain shall be the design peak wet weather flow from the pump station. The minimum design velocity for a forcemain shall be three (3) fps, and maximum allowed five (5) fps.

Where possible, forcemains shall continuously rise from the pump station to the terminal manhole to eliminate the need for air and vacuum release valves. As described in Section 6.0.9.6 sewage air release valves shall **not** be used unless absolutely necessary.

The discharge from forcemains shall be into a manhole with a smooth transition to a gravity sewer. The forcemain terminal manhole shall be lined as described in Camarillo Sanitary District Standard Plate 1, *Manhole*.

In selecting the pumps, a range of Hazen-Williams C factors (80-150) shall be used to ascertain that the pump will operate in the proper operating range regardless of the condition of the forcemain. The forcemain material to be used shall be determined by the City Engineer.

For new pump stations with phased development of the tributary area, dual forcemains may be required. The City Engineer shall select the number of forcemains that will be installed at each pump station.

6.0.21 Access Roads

Pump stations shall be designed with access roads for construction, operation and maintenance of the equipment (minimum H-20 truck loading with impact). The roads shall have widths and turning radii suitable for the size of vehicle, and heavy hoisting equipment necessary for installation, removal or delivery of equipment or supplies into the station. Pavement sections shall be able to support the load of the heaviest anticipated equipment to be used in the station. Where monorail hoists or traveling cranes are required, adequate headroom clearance shall be provided.

6.0.22 Flood Control

The pump stations shall be designed with pad elevation one foot above the 100-year flood elevation or the elevations indicated on the Flood Insurance Rate Maps in areas where detailed studies have been conducted, whichever is higher. Where available and current, information contained in the Ventura County Flood Control District documents can be used to determine the 100-year flood elevation.

All hydrologic and hydraulic calculations and design shall be in accordance with the standards of the jurisdictional flood control agency standards and the City of Camarillo.

6.0.23 Grading and Area Drainage

The site drainage shall be designed to prevent standing water or the erosive effects of storm runoff. Pavement areas shall have a positive drain of up to three (3) percent maximum. Flow lines shall have a minimum of one (1) percent slope. Underground structures shall **not** be constructed in partially cut and partially fill. Where this condition exists, the site shall be overexcavated and re-stabilized.

6.0.24 Soils Report

A geotechnical investigation shall be conducted to determine the underground soils conditions. The Soils report shall include but not be limited to showing the foundation design criteria, corrosiveness of soils and ground water, groundwater elevations if it exists, and possible hazardous materials underground. Cleaning of such materials shall be addressed in the construction contract, or can be awarded to a separate hazardous materials Contractor as determined by the City Engineer.

6.0.25 Surveying

The control bench marks shall be referenced from the County records. Where existing survey and reference plans are available, field check existing data with the current datum and adjust all elevations to current datum where required. The location of the pump station shall be tied to a nearby street and to an existing property line. Basis of survey bearings and control shall be given if the local coordinates are established.

6.0.26 Security

The pump station site shall be provided with an eight (8) foot high masonry block wall, as directed by the City Engineer. The wall shall be designed in accordance with applicable American Public Works Association Standards. The entrance gate shall be secured with a padlock. Where the pump station has a superstructure housing the motor control center and the generator, the building shall be equipped with intrusion alarms. The alarms shall be connected to an audible device mounted in the building, a red beacon light mounted outside the building.

6.0.27 Water Supply System

The pump station water supply system shall be provided for pump seal water system where it is needed, odor control system, irrigation system, rest rooms and housekeeping hose downs. An approved cross connection control device(s) shall be installed in the pipeline connecting the hose bibs, seal water, odor control, and irrigation system. Seal water systems and odor control systems shall utilize air gap tanks, and **not** be directly connected to the water supply system. All piping shall be designed in conformance with the Uniform Plumbing Code and/or the City of Camarillo Water Standards and Specifications.

6.0.28 Landscaping and Irrigation System

Plants selected shall be drought resistant and approved by the City Engineer. Irrigation system equipment shall utilize water saving kits that are controlled by automatic timers.

6.0.29 Construction

The pump station shall be constructed in conformance with the specifications and drawings. The pump station construction shall be administered and inspected by the Camarillo Sanitary District, or its designated representative.

6.0.30 Shop Drawing Submittal and Shop Drawing Review

The Technical Specifications shall specify the requirements for shop drawing submittal and review process.

Once the project is awarded and/or permitted, shop drawing submittals shall be reviewed as necessary until accepted. The shop drawing review is one way to check compliance with the specifications. It also serves as a mechanism to get from the Contractor the equipment as specified. Where a substitution to specified equipment is proposed to the construction project the design project engineer shall be consulted.

6.0.31 Equipment Installation and Testing

The equipment installation and testing shall be specified in each equipment specification. Normally, the equipment shall be specified to be installed by the Contractor under the supervision of a certified factory representative. After installation, the Contractor shall conduct trial operation of the equipment, and make the necessary adjustments as required. When the equipment becomes operational, the Contractor shall test the equipment in the presence of the District's representative. The test shall include a performance test, simulating the manual and automatic operation, and checking of other components in compliance with the specifications.

The test shall also include verification of all alarm functions. A continuous test using the actual process material shall be conducted without any system failure prior to final acceptance.

6.0.32 Operation and Maintenance Manual

The Operation and Maintenance Manual shall be prepared by the construction Contractor based upon the plans and specifications, and assistance from equipment manufacturers, to clearly describe how the pump station shall operate under normal and emergency conditions, and how it should be maintained.

Final payment shall **not** be made to the Contractor until the Operation and Maintenance Manual is approved by the District.

6.0.33 Operator Training

Each pump station has unique operational requirements and some have equipment that requires formularization by the station operators. The Contractor shall provide training, through respective authorized equipment representatives, to the station operators as specified in the Contract Documents.

SECTION 7 STANDARD PLATE DRAWINGS

Manhole ..... Plate 1
Manhole Shaft J ..... Plate 2
Flat Top Manhole Under 5' Depth ..... Plate 3
Drop Manhole with Cleanout ..... Plate 4
VCP and Concrete Base Connection..... Plate 5
PVC Pipe and Concrete Base Connection ..... Plate 6
Sampling/Monitoring Manhole (Palmer Bowlus Flume) ..... Plate 7
Manhole Frame and Cover ..... Plate 8
Manhole Opening Orientation ..... Plate 9
Existing Manhole Connection ..... Plate 10
Abandonment of Existing Manhole ..... Plate 11
Pipe Bedding ..... Plate 12
Maximum Allowable Depth to Invert ..... Plate 13
Pipe and Concrete Encasement (Type A, B, &C) ..... Plate 14
Service Lateral ..... Plate 15
Lateral Cleanout ..... Plate 16
Steep Service Lateral ..... Plate 17
Cut In Wye Connection ..... Plate 18
Concrete Slope Anchors ..... Plate 19
Gravity Pipe Field Closure ..... Plate 20
Sewer Backflow Device ..... Plate 21
Steel Casing ..... Plate 22
Utility Trench Repair within Existing Pavement Area ..... Plate 23
Pipe Wall Penetration Seal ..... Plate 24
Water and Sewer Separation ..... Plate 25
Sand & Oil Interceptors ..... Plate 26
Grease Interceptors ..... Plate 27
R. V. Dump Station ..... Plate 28
Residential Sanitary Lift Station ..... Plate 29

MANHOLE DETAILS NOTES:

NOTES:

1. REFER TO SECTION 2.5 STRUCTURES OF THE CAMARILLO SANITARY DISTRICT MANUAL OF STANDARD SPECIFICATIONS. FOR NON-OPERATIONAL, NON-FUNCTIONING MANHOLES, PLACE TWO HALF-MOON SHAPED TEMPORARY PLYWOOD COVERS (⅝-INCH THICK MINIMUM) IN BOTTOM OF MANHOLE AFTER SHAFTS HAVE BEEN SET TO KEEP DEBRIS FROM ENTERING SEWER. FOR LIVE, WORKING MANHOLES, INSERTS MANUFACTURED BY SSI CUSTOM PLASTICS (OR EQUAL) SHALL BE REQUIRED.
2. FOR DROP MANHOLE WITH CLEANOUT, SEE STD. PLATE 4.
3. FOR MANHOLES LOCATED OUTSIDE PAVED AREAS, THE FRAME AND COVER SHALL BE SET A MINIMUM OF 2-INCHES ABOVE FINISH GRADE IN SHOULDER AREAS, UNPAVED ROADS, OR LANDSCAPING AREAS. AND 3-FEET IN UNDEVELOPED AREAS.
4. ALL INLETS AND OUTLETS SHALL BE SUPPORTED WITH CONCRETE SUPPORTS PRIOR TO POURING MANHOLE BASE.
5. MANHOLE LOCATIONS SHALL BE MARKED ON CURB FACE.
6. WALL THICKNESS (T) SHALL BE MINIMUM 6-INCHES FOR 48-INCH MANHOLES, 6-INCHES FOR 60-INCH MANHOLES, AND 7-INCHES FOR 72-INCH MANHOLES.
7. TOP OF MANHOLE CONE SHALL BE CONSTRUCTED NO MORE THAN 18-INCHES AND NO LESS THAN 12-INCHES FROM FINISH SURFACE.
8. MANHOLE BASE SHALL BE EITHER FORMED OR POURED AGAINST VERTICAL, SMOOTH EARTH, AND REST ON UNDISTURBED, UNYIELDING SOIL. IF BEDDING HAS BEEN DISTURBED OR YIELDS, THE BASE SHALL BE CONSTRUCTED AS APPROVED BY THE CITY ENGINEER.
9. WHEN DEPTH OF MANHOLE IS LESS THAN 5-FEET FROM THE TOP OF PIPE TO THE FINISH GRADE, MANHOLE SIZE SHALL BE INCREASED TO 60-INCHES PER STD. PLATE 3 FLAT TOP MANHOLE.
10. WHEN DEPTH OF MANHOLE IS GREATER THAN 12-FEET BUT LESS THAN OR EQUAL TO 16-FEET FROM THE TOP OF PIPE TO THE FINISH GRADE, MANHOLE BASE AND SHAFT SHALL BE INCREASED TO A 60-INCH DIAMETER. DEEPER MANHOLES SHALL BE 72-INCH DIAMETER.
11. THERE SHALL BE NO STEPS ALLOWED IN MANHOLES.
12. OUTER SURFACES OF ALL PRE-CAST MANHOLES, CAST-IN-PLACE MANHOLES, AND STRUCTURES SHALL BE CONSTRUCTED WATERTIGHT BY APPLYING MULTIPLE COATS OF AN APPROVED BITUMOUS COATING, NOT LESS THAN 16 MILS TOTAL DRY FILM THICKNESS.
13. INTERIOR SURFACES OF ALL NEW MANHOLES AND STRUCTURES SHALL BE COATED AND/OR LINED WITH MINIMUM 125 MILS THICK SANCON 100, OR APPROVED EQUAL. APPLICATION SHALL BE IN ACCORDANCE WITH MANUFACTURER'S RECOMMENDATIONS.

Camarillo Sanitary District
601 Carmen Drive
Camarillo, CA 93010
(805) 388-5340

MANHOLE

Reviewed: 3/26/2015
Sanitary Superintendent — Date

Approved: Matthew Tucker 3/31/15
City Engineer — Date

REVISIONS	BY	DATE

STD. PLATE 1

SHT. 1 OF 2

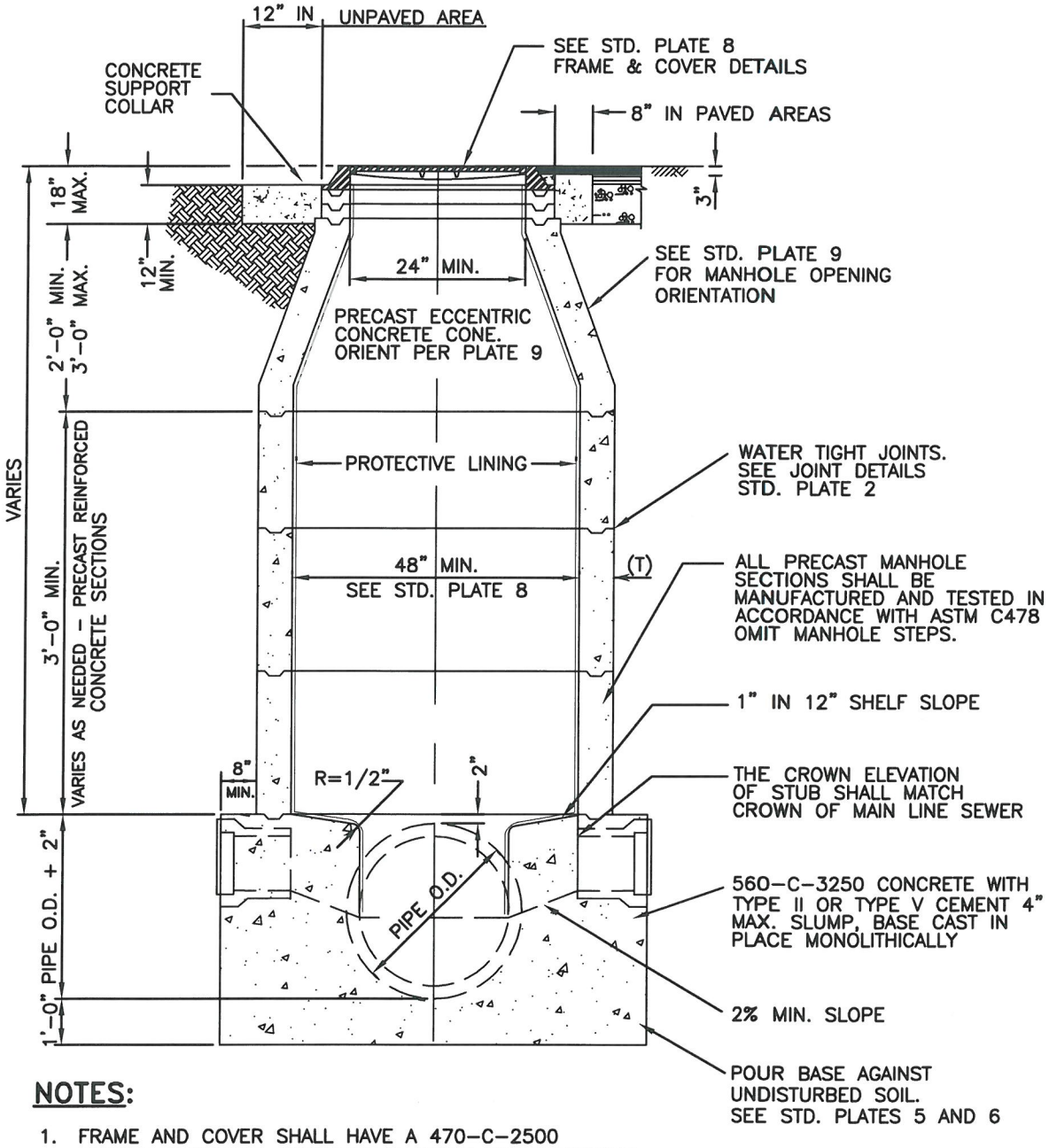

NOTES:

1. FRAME AND COVER SHALL HAVE A 470-C-2500 CONCRETE COLLAR, CIRCULAR IN PAVED AREAS, SQUARE IN UNPAVED, 12-INCH MINIMUM DEPTH.
2. PROVIDE FLEXIBLE JOINT WITHIN 2-FEET OF OUTSIDE FACE, ALL DIRECTIONS, ALL PIPE TYPES.
3. REFER TO STD. PLATES 5 AND 6 FOR FURTHER DETAILS.

Camarillo Sanitary District
601 Carmen Drive
Camarillo, CA 93010
(805) 388-5340

MANHOLE

Reviewed: 3/26/2015
Sanitary Superintendent — Date

Approved: Matthew Tucker 3/31/15
City Engineer — Date

REVISIONS	BY	DATE

STD. PLATE 1

SHT. 2 OF 2

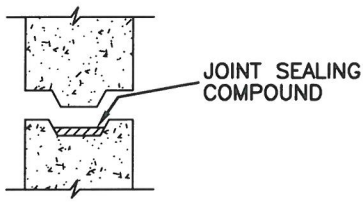

PLASTIC JOINT

REQUIRED IN GROUNDWATER

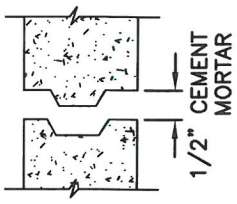

MORTAR JOINT

NOTES:

1. MORTAR JOINTS – SUFFICIENT MORTAR SHALL BE APPLIED ACROSS ENTIRE FACE OF JOINT SO THAT WHEN PRECAST UNITS ARE PLACED ON TOP OF ONE ANOTHER, THE MORTAR WILL SQUEEZE OUT BOTH THE INSIDE AND OUTSIDE WALL FACES. AFTER SETTING PRECAST UNITS, ALL JOINTS SHALL BE TOOL FINISHED, FLUSH.
2. PLASTIC JOINTS – PREFORMED COLD–APPLIED, READY–TO–USE PLASTIC JOINT SEALING COMPOUND SHALL BE QUICK–SEAL AS SUPPLIED BY QUICKSET UTILITY VAULTS, RAM–NECK BY HENRY COMPANY, OR APPROVED EQUAL. MUST BE USED WHEN GROUNDWATER IS ENCOUNTERED.
3. APPLY A 6–INCH MINIMUM WIDTH OUTSIDE JOINT WRAP CENTERED OVER ALL SHAFT JOINTS IN GROUNDWATER AREAS AFTER APPLICATION OF BITUMINOUS DAMP PROOF COATING. JOINT WRAP SHALL BE RU116 RUBR–NEK BY HENRY COMPANY OR SEAL WRAP BY SEALING SYSTEMS, OR APPROVED EQUAL.
4. ALL JOINTS, INCLUDING BASE, SHALL BE CONSTRUCTED WATERTIGHT, FLUSH AND SMOOTH WITH A MATERIAL APPROVED BY THE INTERIOR LINING MANUFACTURER.
5. ALL JOINTS SHALL BE TONGUE AND GROOVE TYPE, INCLUDING BASE.

Camarillo Sanitary District
601 Carmen Drive
Camarillo, CA 93010
(805) 388–5340

MANHOLE SHAFT JOINT

Reviewed: 3/26/2015
Sanitary Superintendent — Date

Approved: Naffaha Tucker 3/31/15
City Engineer — Date

REVISIONS	BY	DATE

STD. PLATE

2

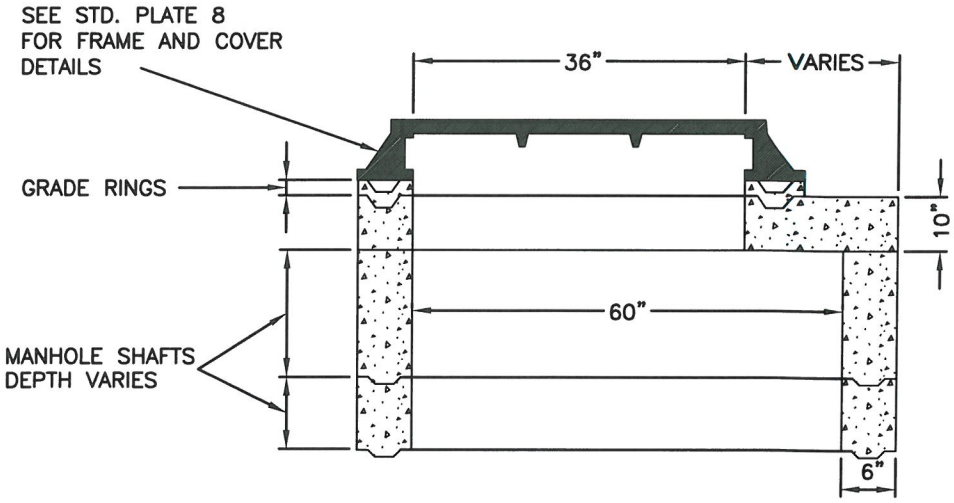

FLAT TOP MANHOLE SECTION

NOTES:

1. FLAT TOP MANHOLES SHALL BE CONSTRUCTED WHEN THE TOP OF PIPE TO MANHOLE RIM IS LESS THAN 5-FEET.
2. USE OF FLAT TOP MANHOLE REQUIRES WRITTEN CAMARILLO SANITARY DISTRICT APPROVAL.
3. CONSTRUCTION SHALL BE IN ACCORDANCE WITH APPLICABLE STD. PLATES 1, 2, 5, 6, 7, 8 & 9.

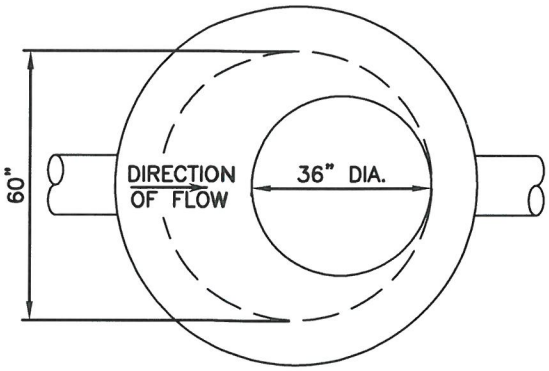

PLAN

Camarillo Sanitary District
601 Carmen Drive
Camarillo, CA 93010
(805) 388-5340

FLAT TOP MANHOLE UNDER 5' DEPTH

Reviewed: 3/26/2015
Sanitary Superintendent — Date

Approved: Meghan Tucker 3/31/15
City Engineer — Date

REVISIONS	BY	DATE

STD. PLATE 3

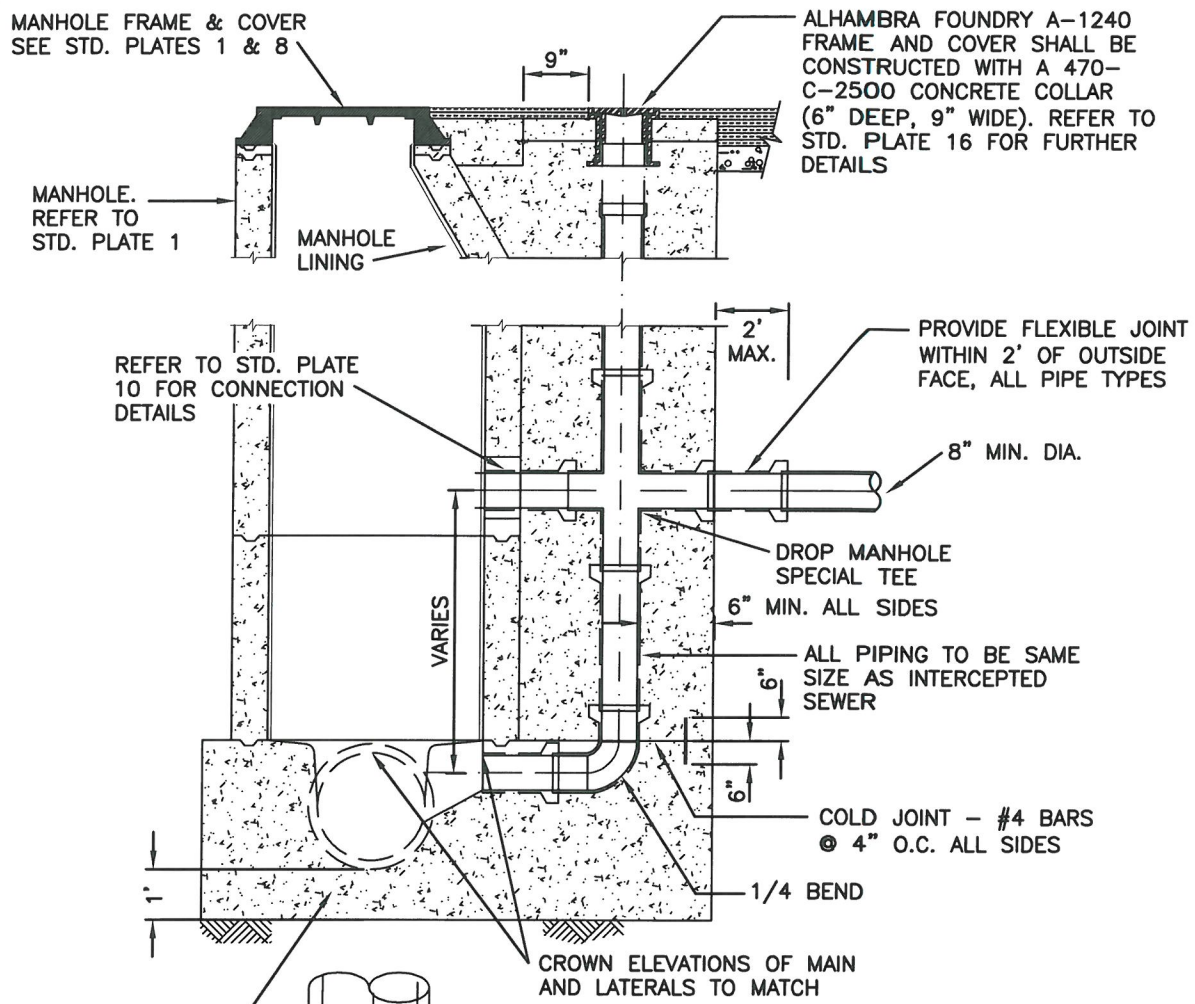

SECTION

560-C-3250 WITH 4" MAX. SLUMP CONCRETE WITH TYPE II OR TYPE V CEMENT. REFER TO STD. PLATES 5 & 6 FOR FURTHER DETAILS

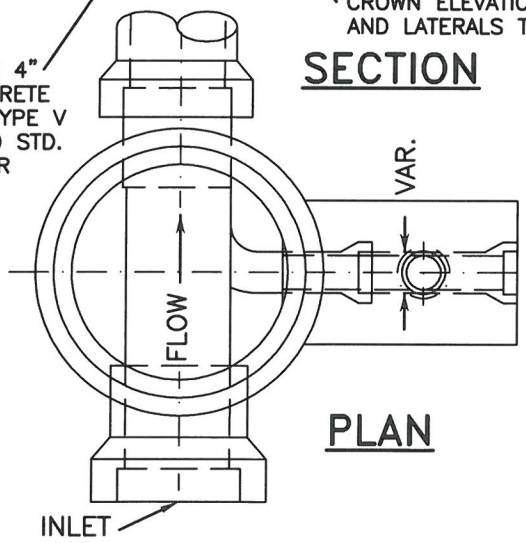

PLAN

NOTES:

1. DROP MANHOLE TO BE USED FOR SPECIAL SITUATION ONLY, AND SHALL NOT BE CONSTRUCTED WITHOUT APPROVAL BY CAMARILLO SANITARY DISTRICT.
2. ALL NEW OPENINGS CONSTRUCTED INTO EXISTING MANHOLE SHALL BE DONE BY CORE DRILLING. SEE STD. PLATE 10.
3. ALL DROP MANHOLES SHALL HAVE AN APPROVED INTERIOR PROTECTIVE LINING. SEE STD. PLATE 1.
4. REFER TO STD. PLATES 1, 2, 5, 6, 8 & 9 FOR APPLICABLE MANHOLE DETAILS.

Camarillo Sanitary District
601 Carmen Drive
Camarillo, CA 93010
(805) 388-5340

DROP MANHOLE WITH CLEANOUT

Reviewed: 3/26/2015
Sanitary Superintendent — Date

Approved: Matthew Tucker 3/31/15
City Engineer — Date

REVISIONS	BY	DATE

STD. PLATE 4

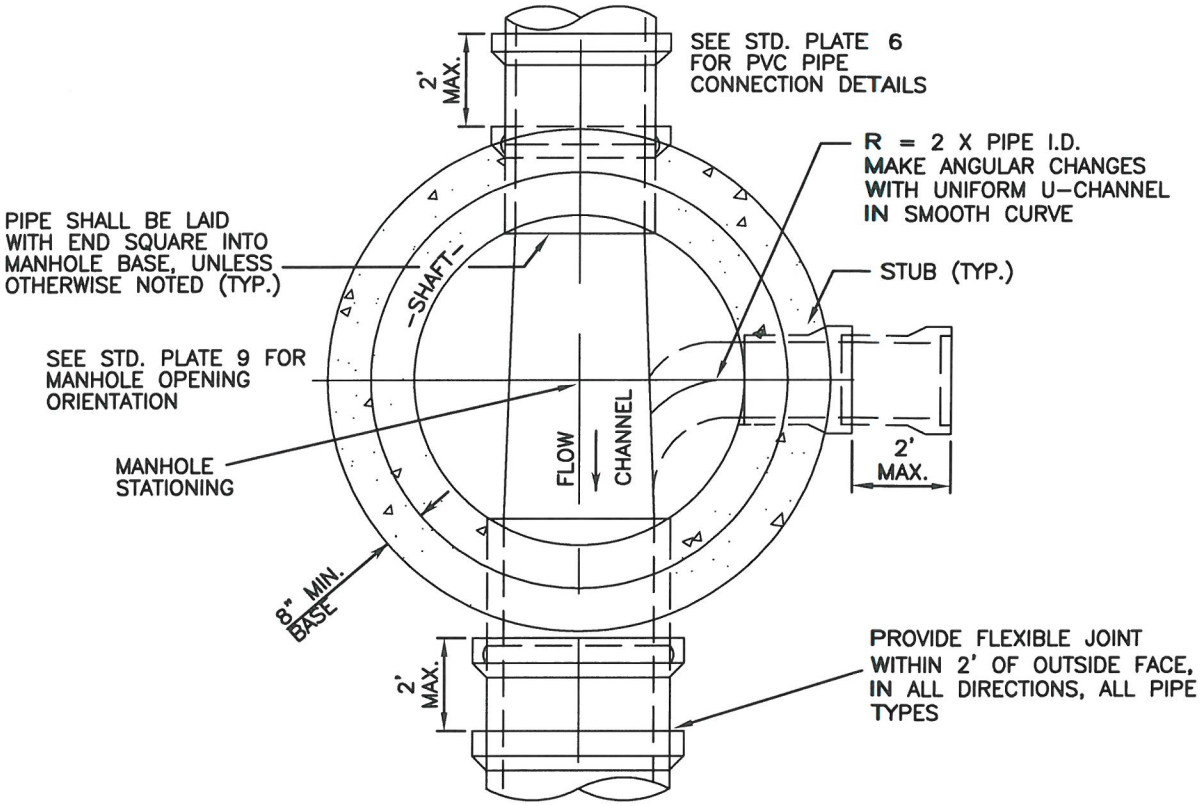

PLAN

NOTES:

1. MANHOLE BASE SHALL BE CONSTRUCTED ON A FIRM, UNYIELDING, UNDISTURBED SUBGRADE OR APPROVED BEDDING. IF SUBGRADE IS YIELDING OR HAS BEEN DISTURBED, BASE SHALL BE CONSTRUCTED AS APPROVED BY THE CITY ENGINEER.
2. UNLESS OTHERWISE DIRECTED, BASE SHALL BE CONSTRUCTED OF 560-C-3250 CONCRETE AND TYPE II OR TYPE V CEMENT.
3. PROVIDE 0.10-FOOT FALL ACROSS MANHOLE WHERE POSSIBLE.
4. REFER TO STD. PLATES 1, 2, 3, 8 AND 9 FOR FURTHER MANHOLE DETAILS.

Camarillo Sanitary District
601 Carmen Drive
Camarillo, CA 93010
(805) 388-5340

VCP AND CONCRETE BASE CONNECTION

Reviewed: 3/26/2015
Sanitary Superintendent — Date

Approved: Matthew Tucker 3/31/15
City Engineer — Date

REVISIONS	BY	DATE

STD. PLATE 5

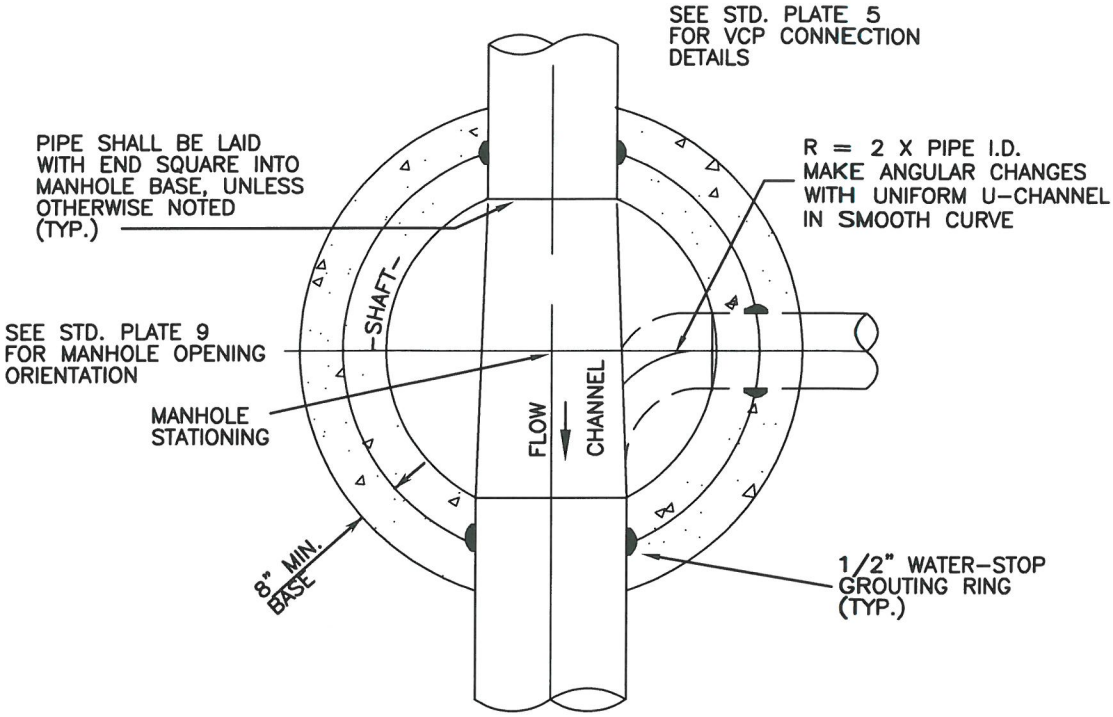

PLAN

NOTES:

1. MANHOLE BASE SHALL BE CONSTRUCTED ON A FIRM, UNYIELDING, UNDISTURBED SUBGRADE OR APPROVED BEDDING. IF SUBGRADE IS YIELDING OR HAS BEEN DISTURBED, BASE SHALL BE CONSTRUCTED AS APPROVED BY THE CITY ENGINEER.
2. UNLESS OTHERWISE DIRECTED, BASE SHALL BE CONSTRUCTED OF 560-C-3250 CONCRETE AND TYPE II OR TYPE V CEMENT.
3. PROVIDE 0.10-FOOT FALL ACROSS MANHOLE WHERE POSSIBLE.
4. REFER TO STD. PLATES 1, 2, 3, 8 AND 9 FOR FURTHER MANHOLE DETAILS.
5. WATER-STOP GROUTING RING SHALL BE USED FOR CONNECTING PVC PIPE TO CONCRETE MANHOLE BASE. (AS MANUFACTURED BY PRESS-SEAL GASKET CORP. OR EQUAL).

Camarillo Sanitary District
601 Carmen Drive
Camarillo, CA 93010
(805) 388-5340

PVC PIPE AND CONCRETE BASE CONNECTION

Reviewed: 3/26/2015
Sanitary Superintendent — Date

Approved: Maffalia Tucker 3/31/15
City Engineer — Date

REVISIONS	BY	DATE

STD. PLATE 6

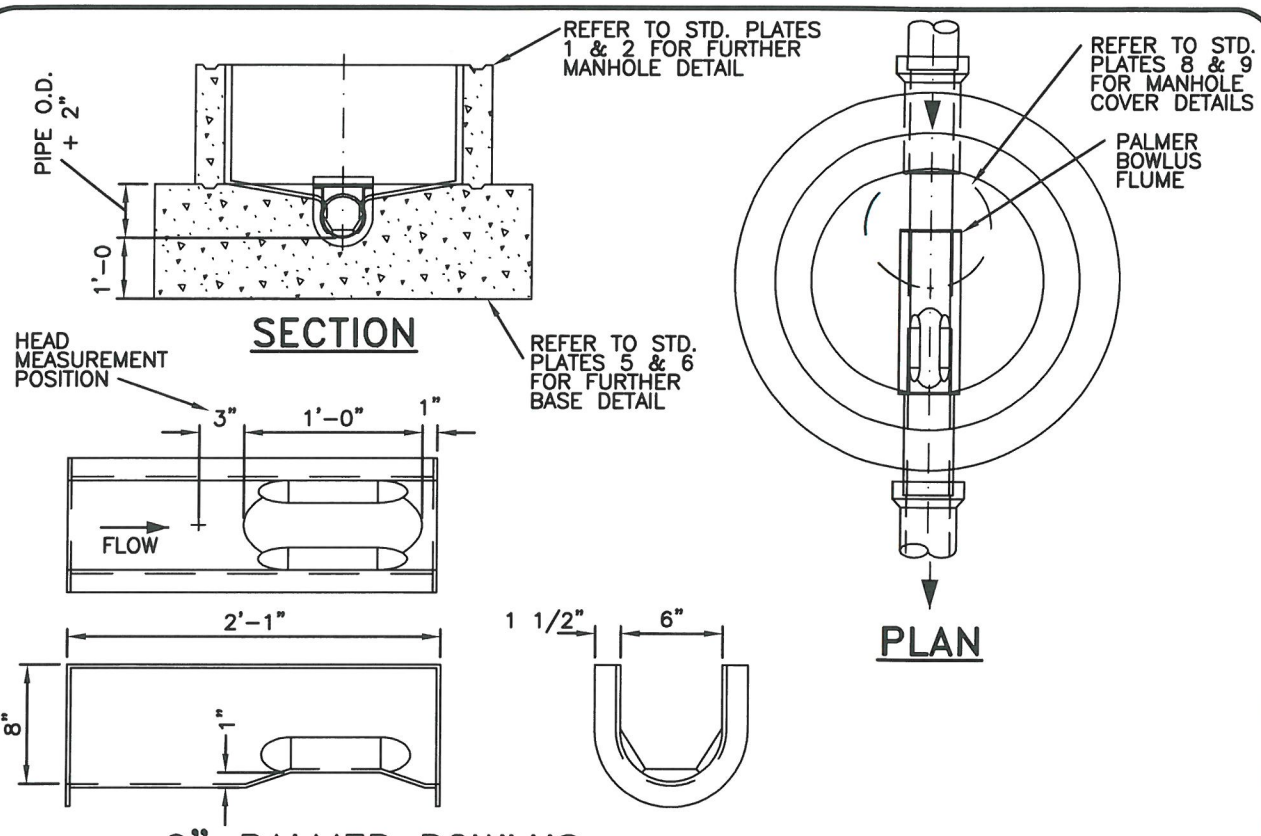

6" PALMER BOWLUS

NOTES:

1. SAMPLING MANHOLE SHALL BE LOCATED ON PRIVATE PROPERTY OUTSIDE THE CITY PUBLIC RIGHT OF WAY. CAMARILLO SANITARY DISTRICT SHALL HAVE ACCESS TO THE SAMPLING MANHOLE AT ALL TIMES.
2. FINAL APPROVAL RELATIVE TO THE REQUIREMENTS FOR THE SAMPLING MANHOLE EQUIPMENT INCLUDING BUT NOT LIMITED TO THE SPECIFIC TYPE, SIZE AND SLOPE SHALL BE MADE BY THE CITY ENGINEER.
3. MANHOLE BASE RISER SECTIONS AND TOP SHALL CONFORM TO APPLICABLE STD. PLATES 1, 2, 3, 4, 5, 6, 8 & 9.
4. THE PREFABRICATED FIBERGLASS REINFORCED PLASTIC (FRP) PALMER BOWLUS FLUME AS MANUFACTURED BY PLASTI-FAB (OR APPROVED EQUAL) SHALL BE INSTALLED ACCORDING TO THE MANUFACTURER'S RECOMMENDATIONS.
5. NO BUILDING LATERAL CONNECTION SHALL BE MADE DOWNSTREAM OF ITS SAMPLING MANHOLE.
6. IN ORDER TO CONTROL VELOCITIES, NO SLOPE CHANGES, DEFLECTION AND/OR CONNECTIONS SHALL BE ALLOWED WITHIN A DISTANCE 15 TIMES THE SEWER PIPE I.D. UPSTREAM AND/OR DOWNSTREAM OF THE SAMPLING MANHOLE.
7. THE SLOPE OF THE PIPE SHALL NOT EXCEED 1 PERCENT THROUGH THE SAMPLING MANHOLE FOR A DISTANCE OF 15 TIMES THE PIPE I.D. BOTH UPSTREAM AND DOWNSTREAM OF THE SAMPLING MANHOLE.
8. DOWNSTREAM SEWER SHALL BE DESIGNED TO CONVEY THE MAXIMUM DESIGN FLOWS WITHOUT CREATING A SURCHARGED CONDITION IN THE SAMPLING MANHOLE.

Camarillo Sanitary District
601 Carmen Drive
Camarillo, CA 93010
(805) 388-5340

SAMPLING/MONITORING MANHOLE
(PALMER BOWLUS FLUME)

Reviewed: 3/26/2015
Sanitary Superintendent — Date

Approved: 3/31/15
City Engineer — Date

REVISIONS	BY	DATE

STD. PLATE
7

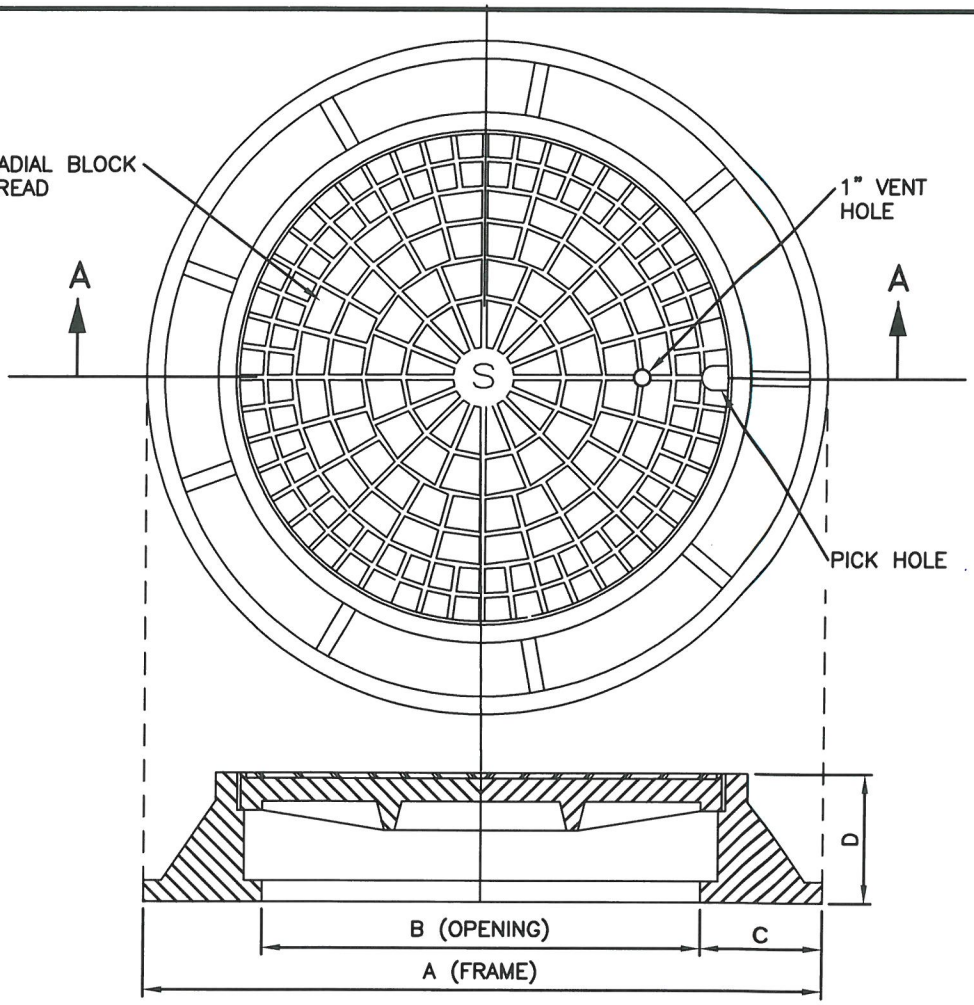

SECTION A–A

MANHOLE SIZE	A	B	C	D	AF NUMBER
48"	32.5"	24"	4.25"	6"	A–1495
60"	38.5"	30"	4.25"	6"	A–1497
72"	44.5"	36"	4.25"	6"	A–1498

NOTES:

1. WHERE FRAME AND COVER ARE SET 3–FEET ABOVE GRADE, FOUR (4) ½–INCH DIAMETER INSERTS FOR ADJUSTABLE STUDS SHALL BE CAST IN TOP GRADE RING, FRAME SHALL BE BOLTED TO GRADE RING.
2. CAST IRON MANHOLE FRAME AND COVER SHALL BE AS MANUFACTURED BY ALHAMBRA FOUNDRY (AF). FRAME AND COVER SHALL BE TRAFFIC RATED.
3. WHERE THE CITY ENGINEER DEEMS NECESSARY FOR HEIGHTENED PROTECTION OF THE PUBLIC OR FACILITIES, PAMREX HINGED MANHOLE FRAME AND LOCKING COVER, OR APPROVED EQUAL, MAY BE REQUIRED.

Camarillo Sanitary District
601 Carmen Drive
Camarillo, CA 93010
(805) 388–5340

MANHOLE FRAME AND COVER

Reviewed: 3/26/2015
Sanitary Superintendent — Date

Approved: Maggalia Tucker 3/31/15
City Engineer — Date

REVISIONS	BY	DATE

STD. PLATE
8

ECCENTRIC

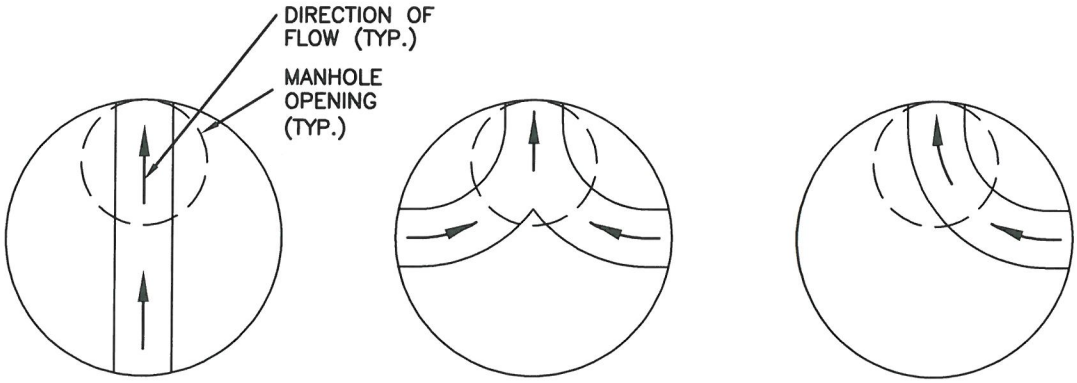

CONCENTRIC

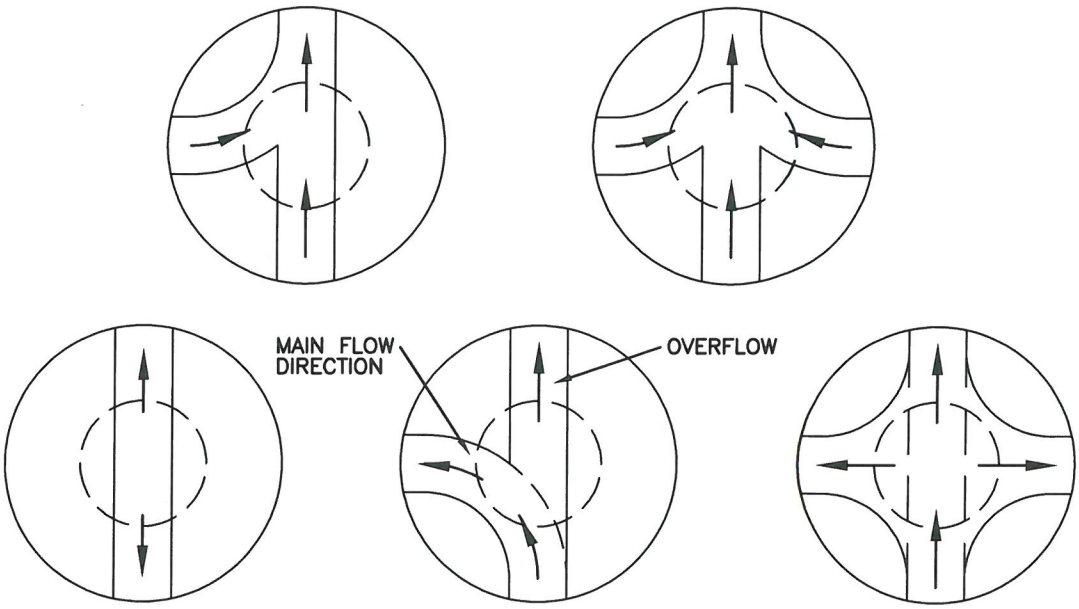

SUMMIT MANHOLE EITHER SIDE

SUMMIT MANHOLE

SUMMIT MANHOLE ANY POSITION

NOTE:

1. PLANS SHALL SPECIFY MANHOLE OPENING ORIENTATION.

Camarillo Sanitary District
601 Carmen Drive
Camarillo, CA 93010
(805) 388-5340

MANHOLE OPENING ORIENTATION

Reviewed: 3/26/2015
Sanitary Superintendent — Date

Approved: 3/31/15
City Engineer — Date

REVISIONS	BY	DATE

STD. PLATE

9

CONNECTION TO EXISTING MANHOLE SHALL BE MADE IN SUCH A MANNER THAT THE MODIFIED MANHOLE IS EQUAL TO A NEW MANHOLE IN APPEARANCE AND PERFORMANCE. A CHANNEL, APPROXIMATELY 2-INCHES LARGER ALL AROUND THAN THE CONNECTING PIPE, SHALL BE CORE-CUT INTO THE EXISTING MANHOLE BASE. THE NEW PIPE SHALL BE CONNECTED AS SHOWN ON SHEET 2. THE ROUGH-CUT CHANNEL SHALL BE FINISHED TO ITS FINAL SMOOTH AND UNIFORM SHAPE WITH MORTAR (MORTAR = 1 PART TYPE II OR TYPE V CEMENT AND 2 PARTS SAND, AS DESCRIBED IN THE SSPWC SECTION 201-5, CEMENT MORTAR). THE EXISTING SEWER(S) SHALL BE MAINTAINED IN SERVICE. THE FRESH CONCRETE AND MORTAR SURFACE SHALL BE PROTECTED FROM THE FLOWING SEWAGE FOR A MINIMUM OF 24 HOURS.

1. THE CORE-CUT HOLE SHALL BE MADE WITH EQUIPMENT SPECIALLY DESIGNED TO CUT A SMOOTH HOLE 2-INCHES LARGER THAN THE PROPOSED CONNECTING PIPE O.D. WITHOUT SPALLING OR CAUSING DAMAGE TO THE STRUCTURE.

2. FLOWLINE/CHANNEL SHALL BE FORMED INTO THE MANHOLE BASE WITH AN I.D. MATCHING THE CONNECTING PIPES. THE EXISTING DOWNSTREAM OUTLET INVERT SHALL BE A MINIMUM 0.10-FOOT BELOW THE NEW CONNECTING PIPE INVERT.

3. GROUT TO BE USED FOR SECURING AND SEALING AROUND SEWER PIPE AT THE PENETRATION SHALL BE A NON-METALLIC, NON-SHRINK, FLOWABLE GROUT. THE EXPANSION, WHICH OCCURS TO COMPENSATE FOR NORMAL HYDRATION, SHALL NOT CREATE STRESSES IN THE PIPE OR MANHOLE. ALL MATERIAL SHALL BE PREMIXED AND READY TO USE WITH ONLY THE ADDITION OF REQUIRED WATER, AND SHALL BE AN APPROVED EQUAL TO BURKE NON-SHRINK, NON-METALLIC GROUT.

4. PROPOSED CONNECTING PIPE/STUB SHALL BE "BELL x PLAIN" ENDS. THE STUBS PLAIN-END SHALL BE INSTALLED FLUSH WITH THE INSIDE WALL OF THE MANHOLE, AND THE BELL-END SHALL EXTEND NO FURTHER THAN 9-INCHES OUTSIDE THE MANHOLE BASE.

5. THE FOLLOWING NOTES SHALL BE INCLUDED ON THE CONSTRUCTION PLANS:

   NOTE: BEFORE ENTERING THIS MANHOLE, CONTRACTOR SHALL COMPLY WITH ALL REQUIREMENTS OF THE DIVISION OF INDUSTRIAL SAFETY-CONSTRUCTION SAFETY ORDERS TITLE 8, ARTICLE 108 "CONFINED SPACES". CONTACT CAMARILLO SANITARY DISTRICT BEFORE ENTERING.

   NOTE: DO NOT ALLOW EXTRANEOUS MATERIAL TO ENTER SEWERAGE FLOW. PRIOR TO THE START OF WORK, ALL DEBRIS, EQUIPMENT, ETC. THAT MAY/COULD FALL INTO THE FLOW CHANNEL SHALL BE REMOVED AND/OR SECURED PROPERLY. THE FLOW CHANNEL IN THE MANHOLE SHALL BE COMPLETELY PROTECTED AT ALL TIMES. ALL PROTECTIVE DEVICES SHALL BE PRE-APPROVED BY THE CITY ENGINEER PRIOR TO THEIR USE AND SHALL BE REMOVED AS SOON AS PRACTICABLE. THE CONTRACTOR SHALL BE HELD RESPONSIBLE FOR ANY AND ALL DAMAGE AND/OR LOSSES TO THE DISTRICT AND/OR THE SANITARY SEWER SYSTEM CAUSED BY THE CONTRACTOR'S NEGLIGENCE AND/OR NOT STRICTLY ADHERING TO THE PROTECTION OF THE ACTIVE SEWERAGE FLOWS.

Camarillo Sanitary District
601 Carmen Drive
Camarillo, CA 93010
(805) 388-5340

EXISTING MANHOLE CONNECTION

Reviewed: 3/26/2015
Sanitary Superintendent — Date

Approved: Mattahi Tucker 3/31/15
City Engineer — Date

REVISIONS	BY	DATE

STD. PLATE 10

SHT. 1 OF 2

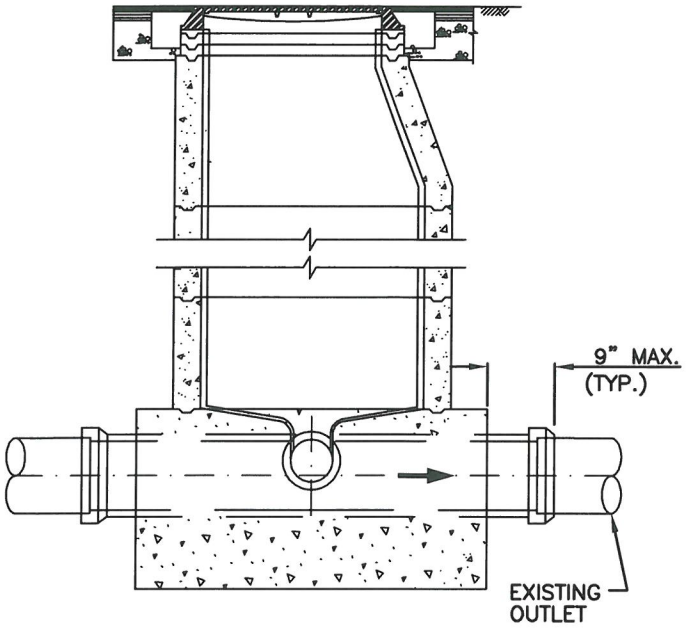

SECTION A

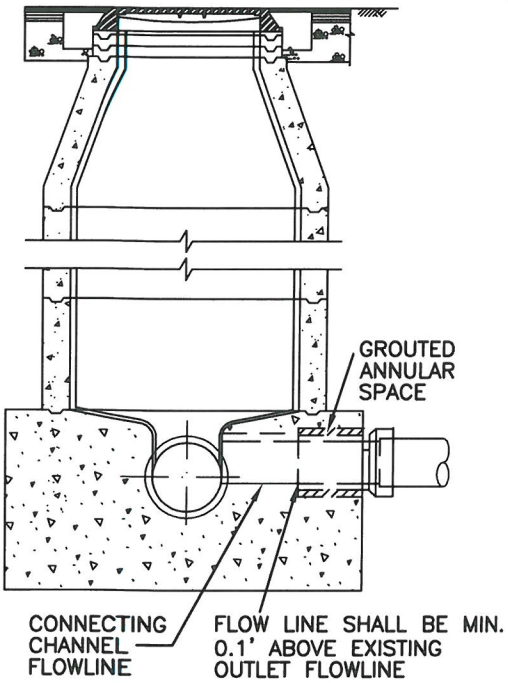

SECTION B

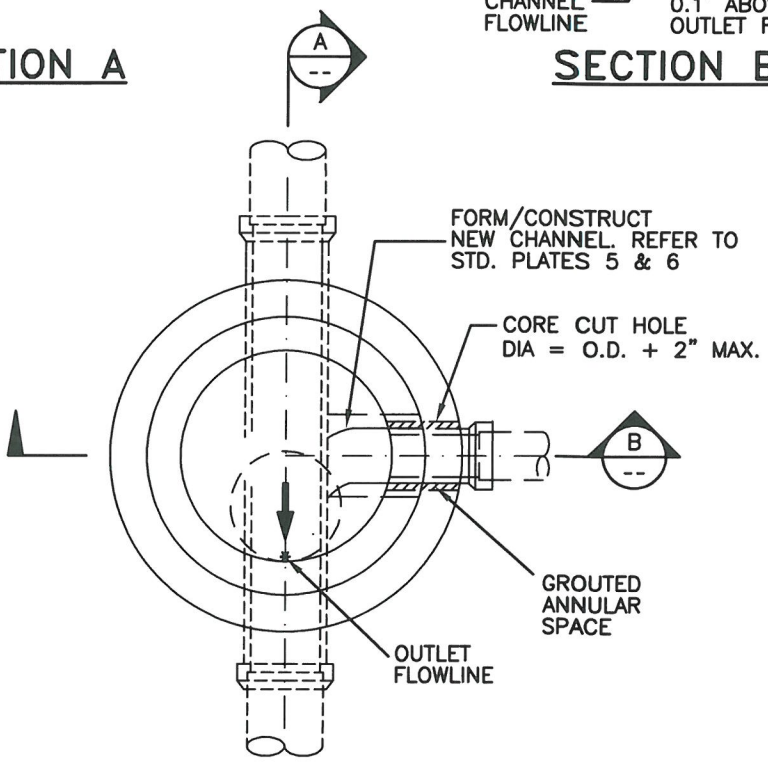

PLAN

Camarillo Sanitary District
601 Carmen Drive
Camarillo, CA 93010
(805) 388-5340

EXISTING MANHOLE CONNECTION

Reviewed: 3/26/2015
Sanitary Superintendent — Date

Approved: Mehdi Tucker 3/31/15
City Engineer — Date

REVISIONS	BY	DATE

STD. PLATE
10
SHT. 2 OF 2

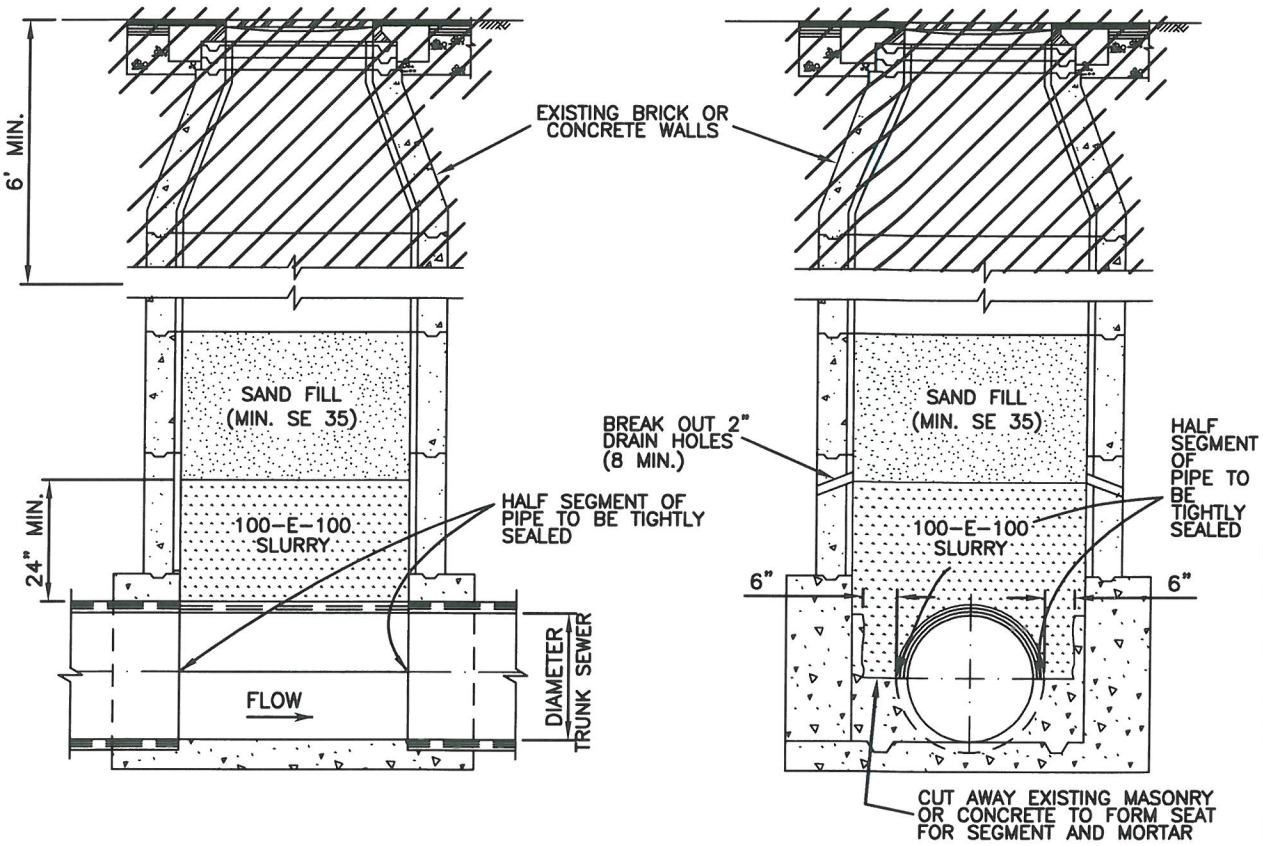

LONGITUDINAL SECTION

CROSS SECTION

NOTES:

1. 48 HOURS PRIOR TO COMMENCING THE ABANDONMENT OF THE MANHOLE, THE CONTRACTOR SHALL CONTACT THE CAMARILLO SANITARY DISTRICT.
2. NO WORK SHALL BE DONE ON MANHOLE EXCEPT IN THE PRESENCE OF CAMARILLO SANITARY DISTRICT REPRESENTATIVE.
3. MANHOLE FRAME AND COVER OF THE MANHOLE TO BE ABANDONED SHALL BE SALVAGED, CLEANED AND DELIVERED TO CAMARILLO SANITARY DISTRICT.
4. THE CONTRACTOR SHALL REMOVE A MINIMUM OF 6-FEET OF THE MANHOLE SHAFT BELOW STREET SUBGRADE. IF MANHOLE DEPTH IS LESS THEN 6-FEET, WITH THE APPROVAL OF THE CITY ENGINEER, THE CONTRACTOR SHALL REMOVE A MINIMUM OF 3-FEET OF THE MANHOLE SHAFT BELOW SUBGRADE.
5. IF THE LOWER PORTION OF THE EXISTING CHANNEL THROUGH THE MANHOLE IS NOT AS SHOWN, THE CHANNEL SHALL BE REFORMED AS DIRECTED BY THE CAMARILLO SANITARY DISTRICT REPRESENTATIVE.
6. HALF SEGMENT OF PIPE SHALL BE OF THE TYPE USED IN THE TRUNK SEWER PIPE.
7. IF SEWER IS TO BE ABANDONED, PLUG/DRY PACK PIPE ENDS AND EXTEND 100-E-100 SLURRY TO CHANNEL.

Camarillo Sanitary District
601 Carmen Drive
Camarillo, CA 93010
(805) 388-5340

ABANDONMENT OF EXISTING MANHOLE

Reviewed: 3/26/2015
Sanitary Superintendent — Date

Approved: Mattahi Tucker 3/31/15
City Engineer — Date

REVISIONS	BY	DATE

STD. PLATE
11

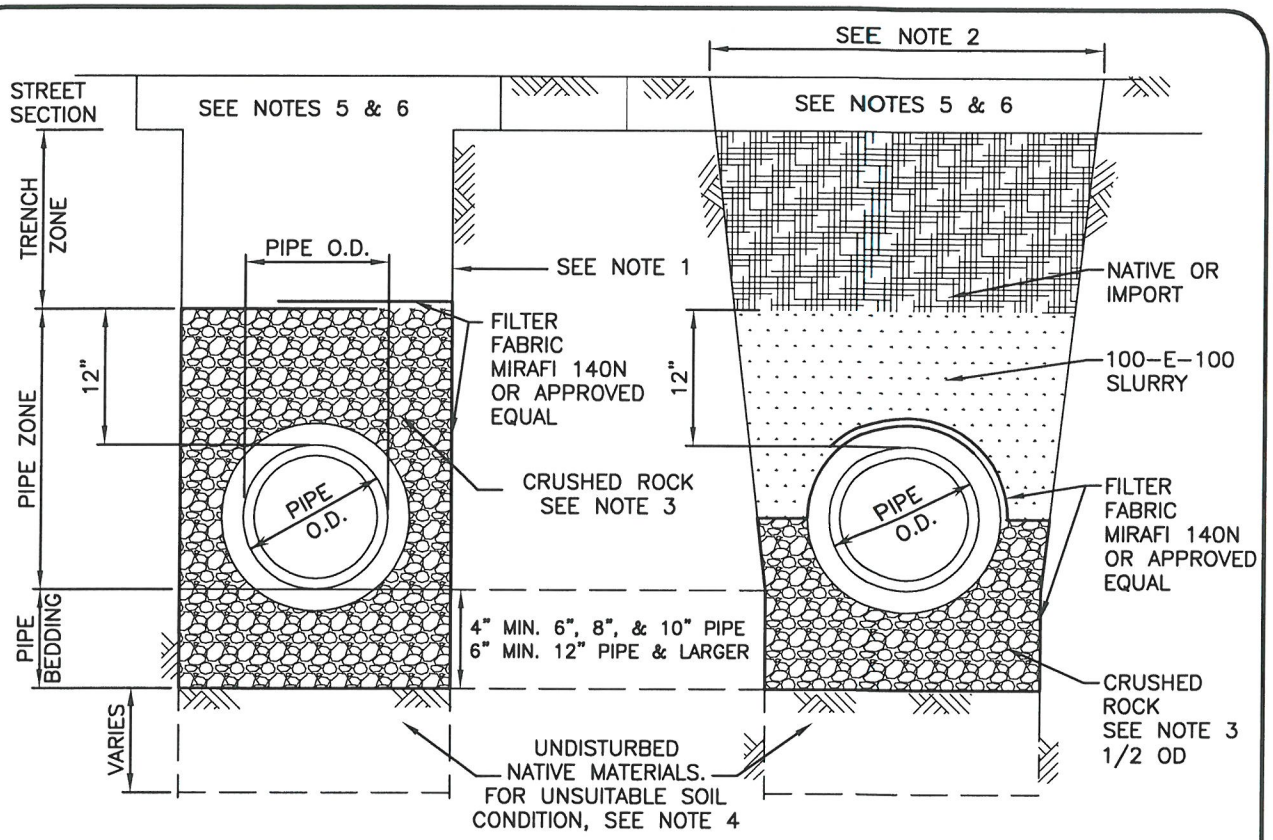

PIPE BEDDING FOR GRAVITY PIPE

NORMAL BEDDING
LOAD FACTOR 1.5 & 1.9

OVERWIDTH BEDDING
LOAD FACTOR 3.0

NOTES:

1. TRENCH WIDTH AT THE UPPER LIMIT OF THE PIPE ZONE SHALL BE WITHIN THE FOLLOWING LIMITS FOR TYPICAL NORMAL BEDDING.
(A) MAXIMUM TRENCH WIDTH–O.D. PIPE OR BELL PLUS 8–INCHES MAX. EACH SIDE OF PIPE.
(B) MINIMUM TRENCH WIDTH–O.D. PIPE OR BELL PLUS 6–INCHES MIN. EACH SIDE OF PIPE.

2. OVERWIDTH BEDDING TO BE UTILIZED WHERE THE TRENCH WIDTH AT THE UPPER LIMIT OF THE PIPE ZONE EXCEEDS THE MAXIMUM WIDTH SPECIFIED ABOVE. MAXIMUM OVERWIDTH BEDDING TO BE DETERMINED BY THE CAMARILLO SANITARY DISTRICT REPRESENTATIVE.

3. CRUSHED ROCK PER SSPWC 306.1.2.1 BEDDING.

4. IF UNSUITABLE SUBGRADE SOIL CONDITIONS ARE ENCOUNTERED, A REGISTERED GEOTECHNICAL ENGINEER SHALL DETERMINE DEPTH OF REMOVAL AND SIZE OF FOUNDATION ROCK REFILL MATERIAL. MINIMUM DEPTH OF REMOVAL SHALL BE 12–INCHES.

5. IN EXISTING PAVED AREA, TRENCH ZONE AND STREET SECTION PER STD. PLATE 23.

6. IN UNPAVED AREAS, TRENCH ZONE BACKFILL SHALL BE NATIVE OR IMPORT PLACED AT 90% RELATIVE COMPACTION, IN 1 FOOT LIFTS.

7. SECURE PIPE TO PREVENT FLOTATION PER CAMARILLO SANITARY DISTRICT REPRESENTATIVE.

Camarillo Sanitary District
601 Carmen Drive
Camarillo, CA 93010
(805) 388-5340

PIPE BEDDING

Reviewed: 3/26/2015
Sanitary Superintendent — Date

Approved: Mattalia Tucker 3/31/15
City Engineer — Date

REVISIONS	BY	DATE

STD. PLATE 12
SHT. 1 OF 2

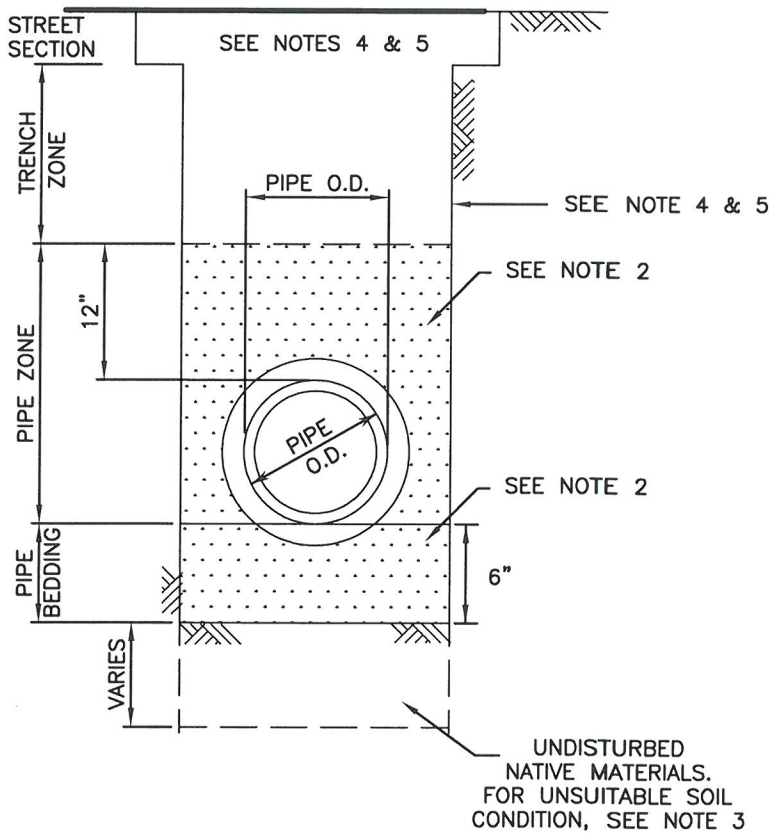

PIPE BEDDING FOR PRESSURE PIPE

NOTES:

1. TRENCH WIDTH AT THE UPPER LIMIT OF THE PIPE ZONE SHALL BE WITHIN THE FOLLOWING LIMITS.
(A) MAXIMUM TRENCH WIDTH–O.D. PIPE OR BELL PLUS 8–INCHES MAX. EACH SIDE OF PIPE.
(B) MINIMUM TRENCH WIDTH–O.D. PIPE OR BELL PLUS 6–INCHES MIN. EACH SIDE OF PIPE.

2. SE 35 MATERIAL AT A MINIMUM OF 95% OF MAXIMUM DENSITY.

3. IF UNSUITABLE SUBGRADE SOIL CONDITIONS ARE ENCOUNTERED, A REGISTERED GEOTECHNICAL ENGINEER SHALL DETERMINE DEPTH OF REMOVAL AND SIZE OF FOUNDATION ROCK REFILL MATERIAL. MINIMUM DEPTH OF REMOVAL SHALL BE 12–INCHES.

4. IN EXISTING PAVED AREA, TRENCH ZONE AND STREET SECTION SHALL PER STD. PLATE 23.

5. IN UNPAVED AREAS TRENCH ZONE BACKFILL SHALL BE NATIVE OR IMPORT PLACED AT 90% RELATIVE COMPACTION.

6. WHERE CONTRACTOR FAILS TO MAINTAIN PROPER TRENCH WIDTH, SPECIAL BACKFILL AND BEDDING, SUCH AS ONE SACK SLURRY, SHALL BE USED AS DIRECTED BY DISTRICT REPRESENTATIVE.

7. SECURE PIPE TO PREVENT FLOTATION PER CAMARILLO SANITARY DISTRICT REPRESENTATIVE.

Camarillo Sanitary District
601 Carmen Drive
Camarillo, CA 93010
(805) 388–5340

PIPE BEDDING

Reviewed: 3/26/2015
Sanitary Superintendent — Date

Approved: Mazhar Tucker 3/31/15
City Engineer — Date

REVISIONS	BY	DATE

STD. PLATE 12
SHT. 2 OF 2

MAXIMUM ALLOWABLE DEPTH TO INVERT (FEET)							
MAXIMUM DIAMETER PIPE IN.	MAXIMUM TRENCH WIDTH IN.	VCP		SDR 26 PVC		DIP	AWWA C900
		L.F. 1.5	L.F. 1.9	L.F. 1.5	L.F. 1.9		
6	24	16	30+	12	24	30+	30+
8	24	19	30+	12	24	30+	30+
10	28	29	30+	12	24	30+	30+
12	30	22	30+	12	24	30+	30+
15	34	20	30+				
16	35	–	–			30+	
18	38	18	30+				
20	41	–	–				
21	42	18				30+	
24	45	19	30+				
27	49	17	30				
30	52	17				30+	
33	55	16	25				
36	58	16	24				
39							
42							

NOTES:

1. IF TRENCH AT ELEVATION OF TOP OF PIPE EXCEEDS MAXIMUM WIDTH SHOWN, GREATER PIPE STRENGTH MAY BE REQUIRED OR CONCRETE CRADLE ADDED.
2. MINIMUM DEPTH OF COVER OVER TOP OF PIPE IS 3 FEET UNLESS OTHERWISE APPROVED BY THE CITY ENGINEER.
3. TYPES OF PIPE:
   VCP – EXTRA STRENGTH VITRIFIED CLAY PIPE LF 1.5 & 1.9 ASTM G–200
   PVC – ASTM D3034 FOR SDR 26
   DIP – DUCTILE IRON PIPE, CLASS 52, CERAMIC EPOXY LINED AND POLYETHYLENE WRAP AWWA C900
4. WHERE 30+ IS SHOWN IT INDICATES PIPE IS GOOD FOR OVER 30 FEET, STRENGTH COMPUTATION MUST BE SUBMITTED FOR OVER 30 FEET.
5. TABLE BASED ON DRY CLAY BACKFILL AT 120 LBS. PER CUBIC FOOT.

Camarillo Sanitary District
601 Carmen Drive
Camarillo, CA 93010
(805) 388–5340

MAXIMUM ALLOWABLE DEPTH TO INVERT

Reviewed: 3/26/2015
Sanitary Superintendent — Date

Approved: Matthew Tucker 3/31/15
City Engineer — Date

REVISIONS	BY	DATE

STD. PLATE 13

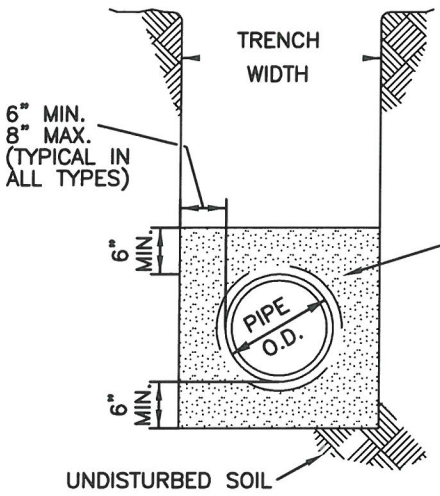

TYPE "A"
LOAD FACTOR 4.5

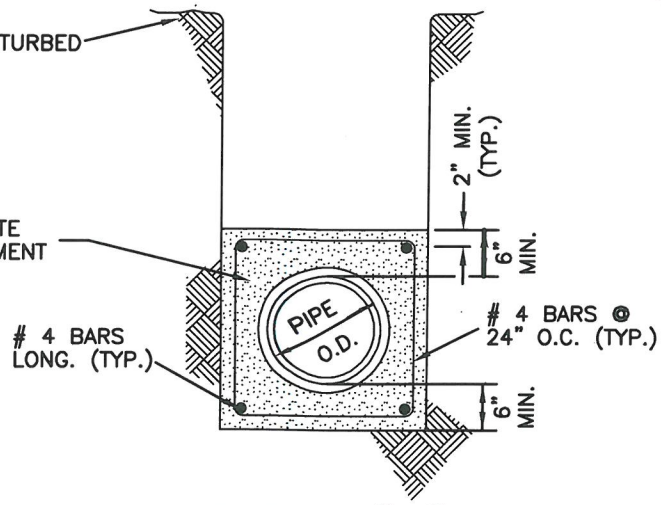

TYPE "B"
LOAD FACTOR 4.5

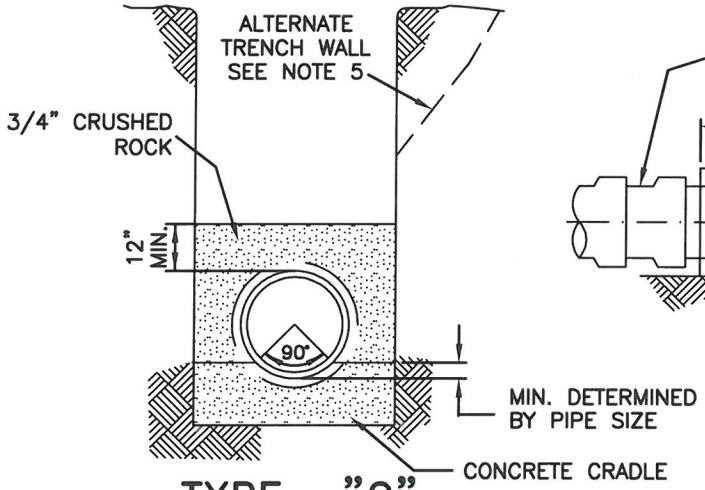

TYPE "C"
LOAD FACTOR 3.0

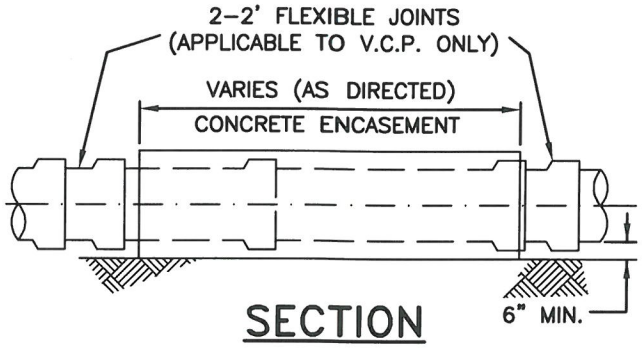

SECTION

NOTES:

1. TYPE OF CONCRETE ENCASEMENT TO BE USED SHALL BE SHOWN ON PLANS OR AS SPECIFIED BY CAMARILLO SANITARY DISTRICT REPRESENTATIVE TO MEET UNFORESEEN FIELD CONDITIONS. UNLESS NOTED OTHERWISE, ENCASEMENT SHALL BE 560-C-3250 WITH 4-INCH MAXIMUM SLUMP. METHODS OF CONVEYING AND CONSOLIDATING CONCRETE SHALL ENSURE DEPICTED. CONSOLIDATION SHALL BE DONE WITHOUT DISPLACING PIPE.
2. CONCRETE ENCASEMENT SHALL BE USED WHEN COVER IS UNDER 4-FEET OR OVER 20-FEET.
3. ENCASEMENT TO BE PLACED AGAINST UNDISTURBED NATURAL GROUND OR FILL COMPACTED TO 90 PERCENT RELATIVE DENSITY.
4. #4 GRADE 60 STEEL REINFORCING BARS SHALL BE PLACED AS SHOWN (TYPE "B").
5. WHERE SLOPED TRENCHES ARE USED, WALLS SHALL NOT BEGIN TO SLOPE CLOSER THAN 12-INCHES FROM THE TOP OF THE PIPE.

Camarillo Sanitary District
601 Carmen Drive
Camarillo, CA 93010
(805) 388-5340

PIPE AND CONCRETE ENCASEMENT TYPE A, B, & C

Reviewed: 3/26/2015
Sanitary Superintendent — Date

Approved: Natalie Tucker 3/31/15
City Engineer — Date

REVISIONS	BY	DATE

STD. PLATE
14

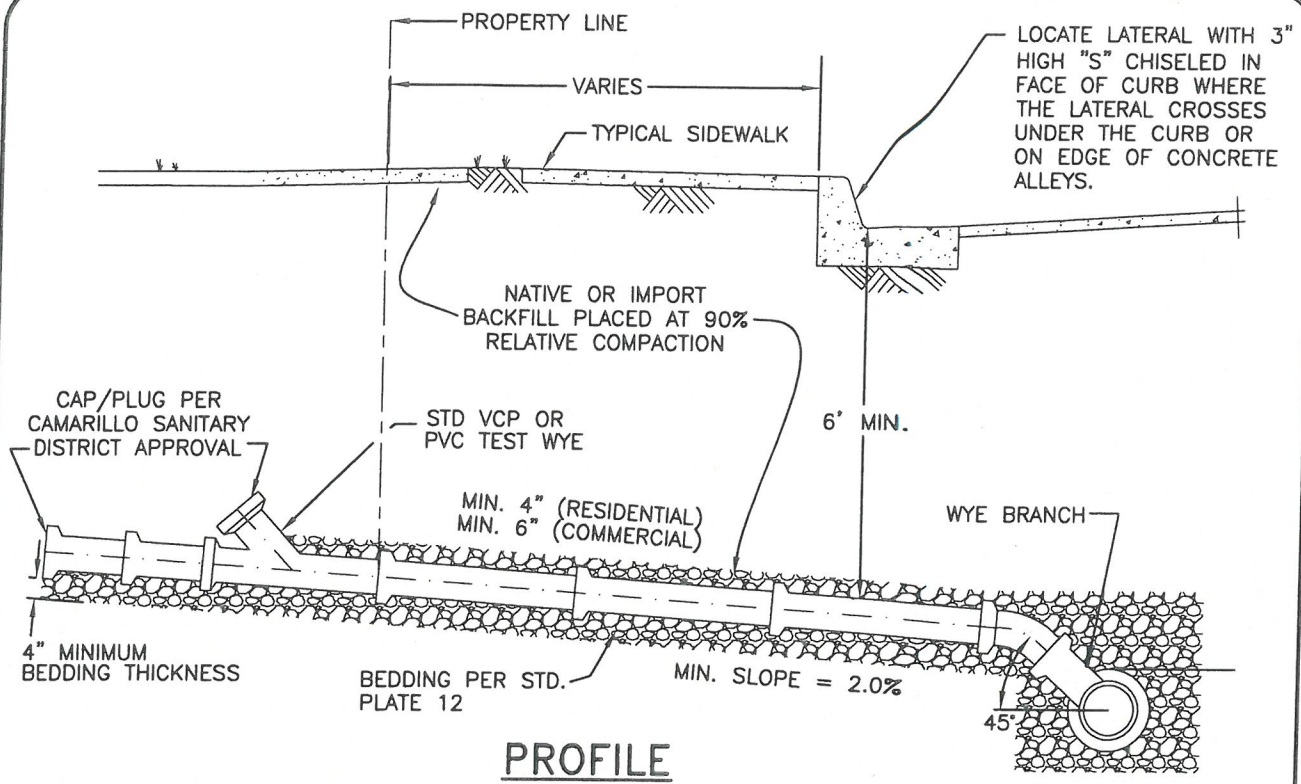

PROFILE

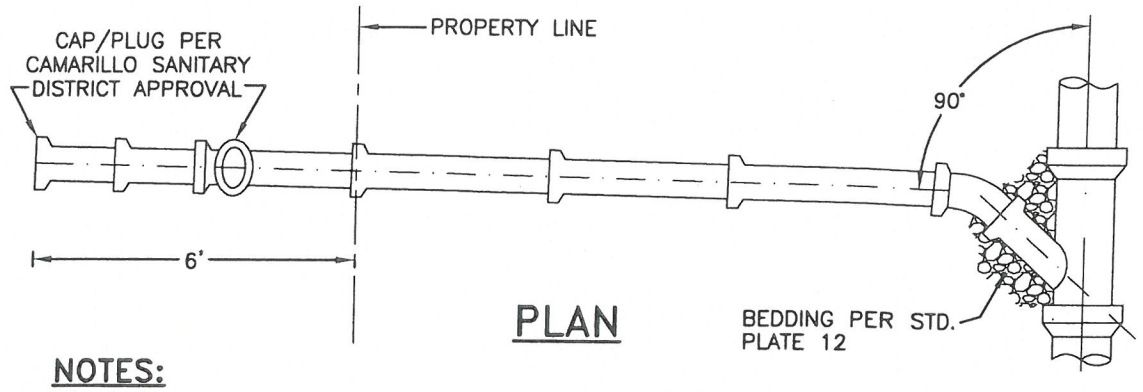

PLAN

NOTES:

1. IN NO CASE SHALL THE LATERAL DIAMETER BE LESS THAN 4-INCHES FOR A SINGLE OR MULTIPLE FAMILY RESIDENTIAL AND 6-INCHES FOR COMMERCIAL OR INDUSTRIAL LAND USES.
2. LATERAL TO BE INSTALLED 6-FEET BEYOND PROPERTY LINE.
3. IF LATERAL NOT BUILT, PLUG WYE BRANCH WITH STOPPER.
4. IF RISER NOT BUILT, PLUG LATERAL AT PROPERTY LINE.
5. PIPE MATERIAL SHALL CONFORM TO SECTION 2.4 SEWER PIPE MATERIAL.

Camarillo Sanitary District
601 Carmen Drive
Camarillo, CA 93010
(805) 388-5340

SERVICE LATERAL

Reviewed: 3/26/2015
Sanitary Superintendent — Date

Approved: Mostafa Tucker 3/31/15
City Engineer — Date

REVISIONS	BY	DATE

STD. PLATE 15

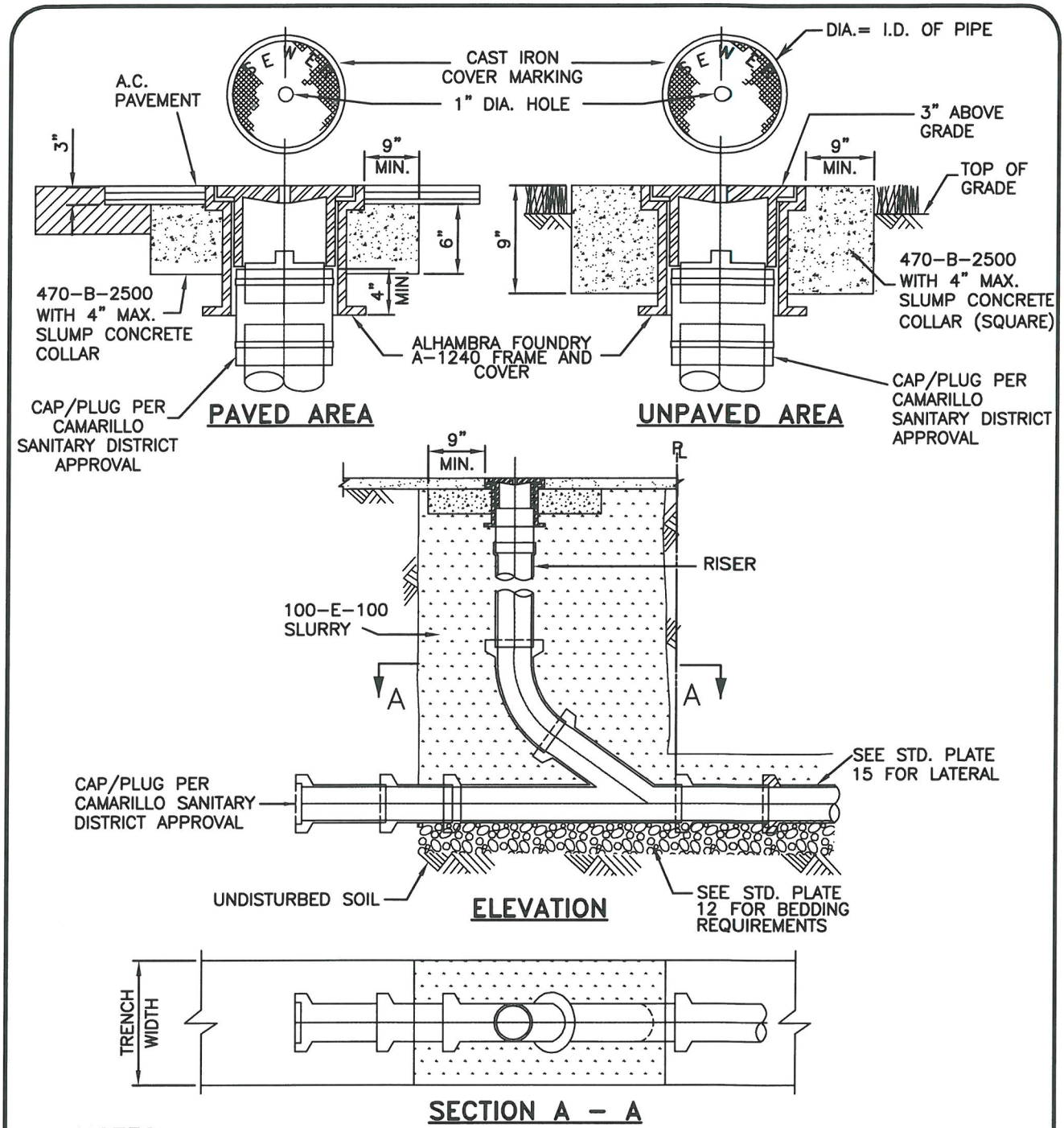

NOTES:

1. CLEANOUT PIPE SHALL BE THE SAME SIZE AND KIND OF MATERIAL AS LATERAL.
2. CLEANOUTS SHALL BE INSTALLED WITHIN 2-FEET OF BUILDINGS, DIRECTION CHANGES, MAXIMUM 100-FOOT INTERVALS.

Camarillo Sanitary District
601 Carmen Drive
Camarillo, CA 93010
(805) 388-5340

LATERAL CLEANOUT

Reviewed: 3/26/2015
Sanitary Superintendent — Date

Approved: Maffalia Tucker 3/31/15
City Engineer — Date

REVISIONS	BY	DATE

STD. PLATE 16
SHT. 1 OF 2

END OF PRIVATE MAIN

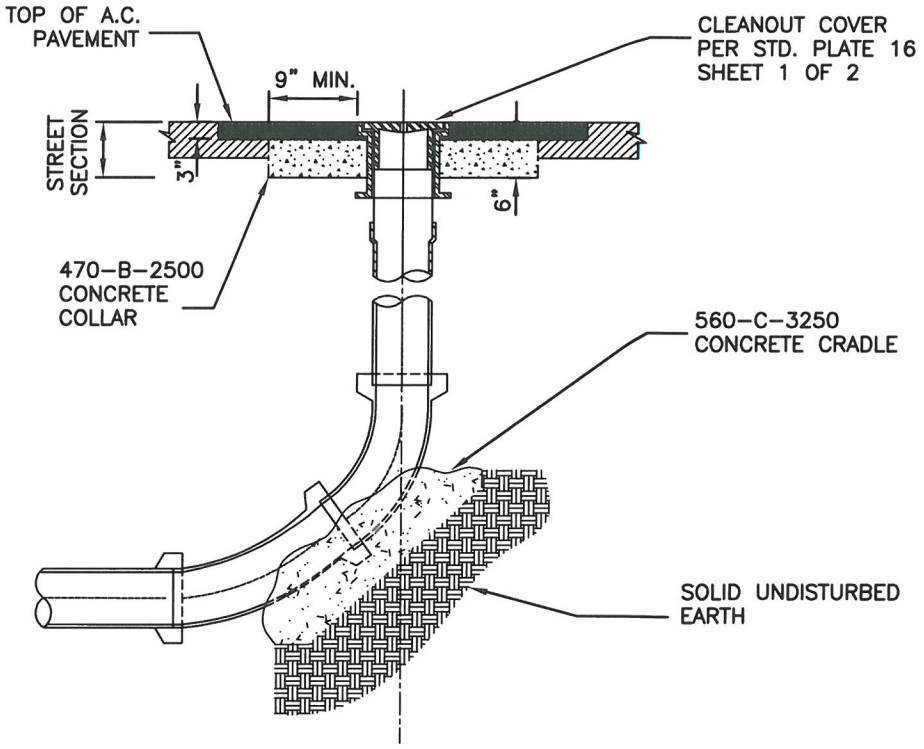

PROFILE

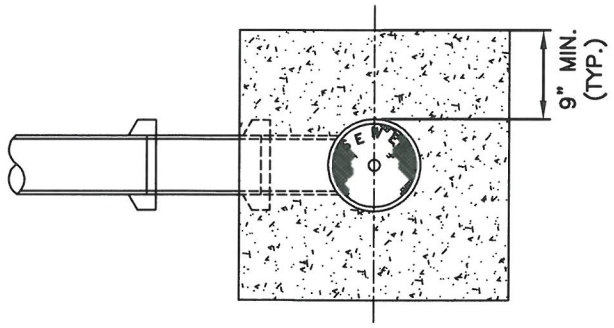

PLAN

NOTE:

RISER MUST BE SLIP FIT WITH COVER SUPPORT.

Camarillo Sanitary District
601 Carmen Drive
Camarillo, CA 93010
(805) 388-5340

LATERAL CLEANOUT

Reviewed: 3/26/2015
Sanitary Superintendent — Date

Approved: Maffalia Tucker 3/31/15
City Engineer — Date

REVISIONS	BY	DATE

STD. PLATE 16
SHT. 2 OF 2

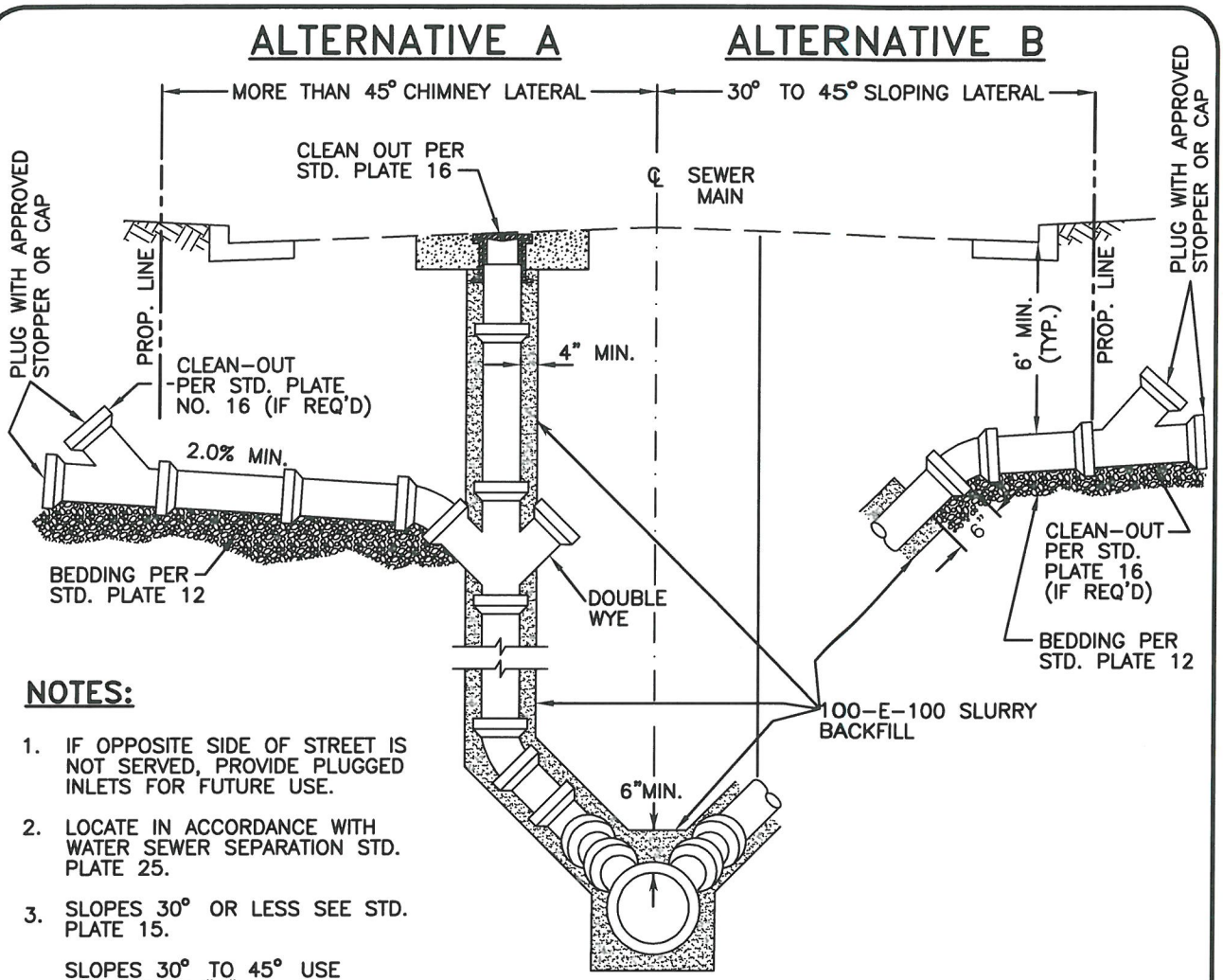

ELEVATION

NOTES:

1. IF OPPOSITE SIDE OF STREET IS NOT SERVED, PROVIDE PLUGGED INLETS FOR FUTURE USE.
2. LOCATE IN ACCORDANCE WITH WATER SEWER SEPARATION STD. PLATE 25.
3. SLOPES 30° OR LESS SEE STD. PLATE 15.

   SLOPES 30° TO 45° USE ALTERNATIVE "B".

   IF SLOPE MUST EXCEED 45° USE ALTERNATIVE "A".
4. 3-INCH HIGH LETTER "S" MUST BE PERMANENTLY ETCHED INTO THE CURB FACE AT THE POINT WHERE THE LATERAL CROSSES UNDER THE CURB.
5. THE USE OF A STEEP SERVICE LATERAL SHALL REQUIRE PRIOR APPROVAL OF THE CITY ENGINEER.
6. REFER TO APPLICABLE STD. PLATE 15 OR 18 FOR WYE LATERAL DETAILS.
7. LATERAL MATERIAL SHALL BE THE SAME AS THE MAIN.

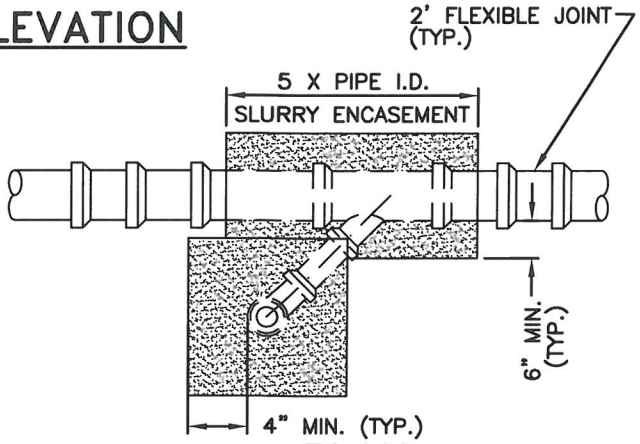

PLAN

Camarillo Sanitary District
601 Carmen Drive
Camarillo, CA 93010
(805) 388-5340

STEEP SERVICE LATERAL

Reviewed: 3/26/2015
Sanitary Superintendent — Date

Approved: 3/31/15
City Engineer — Date

REVISIONS	BY	DATE

STD. PLATE 17

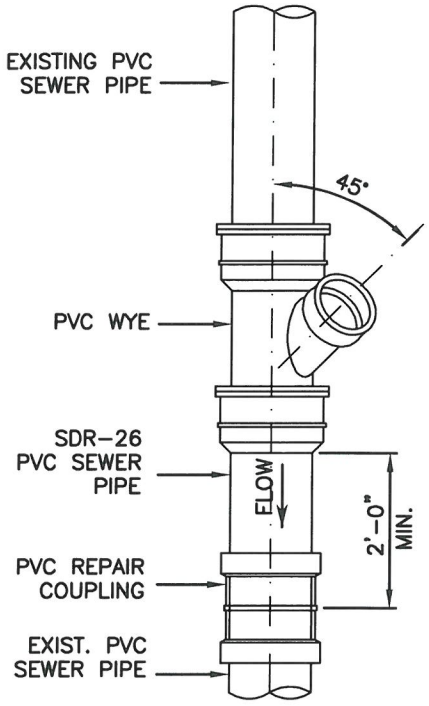

PVC LATERAL CONNECTION

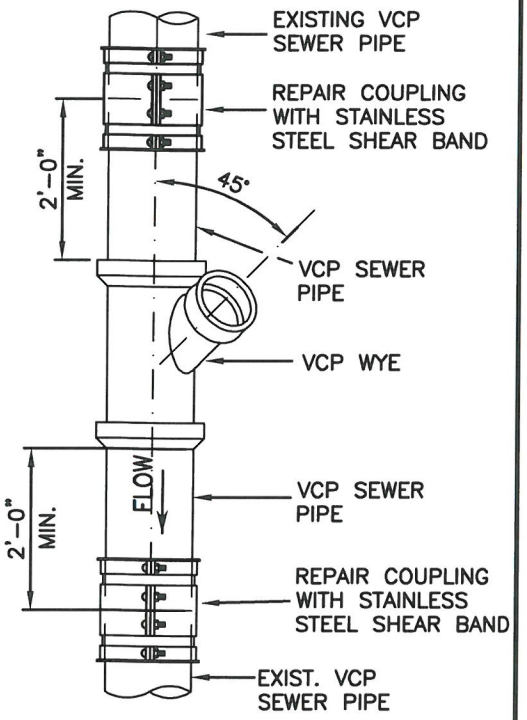

VCP LATERAL CONNECTION

NOTES:

1. FOR PIPE BEDDING DETAIL, REFER TO STD. PLATE 17.
2. ALL CHIPS, DIRT, AND DEBRIS SHALL BE KEPT OUT OF THE SEWER.
3. THERE SHALL BE NO MATERIAL THAT PROTRUDES PAST THE INSIDE WALL OF THE SEWER.
4. 8-INCH AND LARGER CONNECTIONS SHALL BE MANHOLE TYPE, REFER TO STD. PLATE 1.
5. FOR CLOSURE DETAILS, REFER TO STD. PLATE 20.

Camarillo Sanitary District
601 Carmen Drive
Camarillo, CA 93010
(805) 388-5340

CUT IN WYE CONNECTION

Reviewed: 3/26/2015
Sanitary Superintendent — Date

Approved: Maffalia Tucker 3/31/15
City Engineer — Date

REVISIONS	BY	DATE

STD. PLATE 18

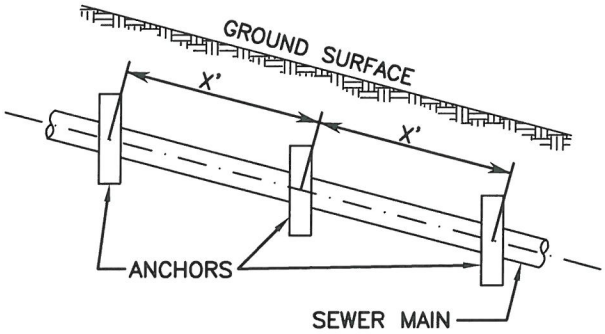

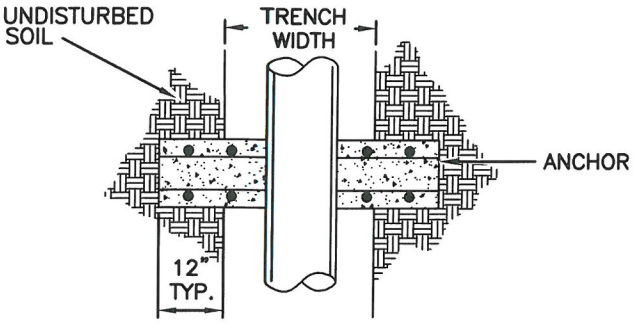

PLAN VIEW

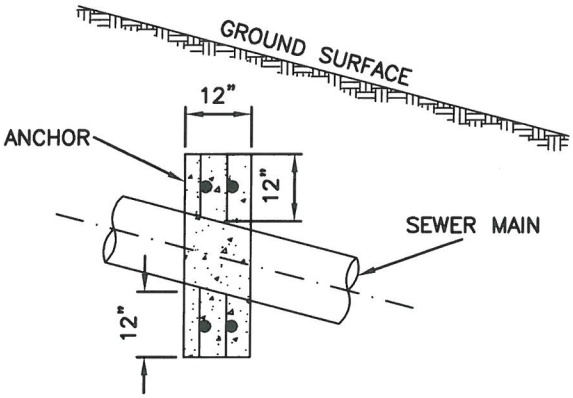

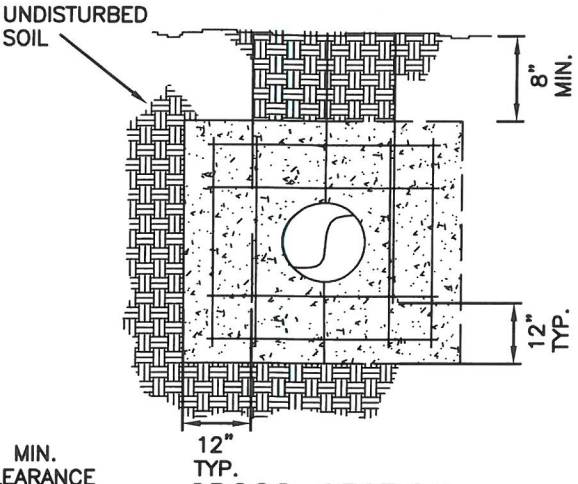

CROSS SECTION

PIPE SLOPE	GROUND SLOPE	X DISTANCE
1.00	1:1	12'
0.67	1-1/2:1	14'
0.50	2:1	16'
0.40	2-1/2:1	18'
0.33	3:1	20'

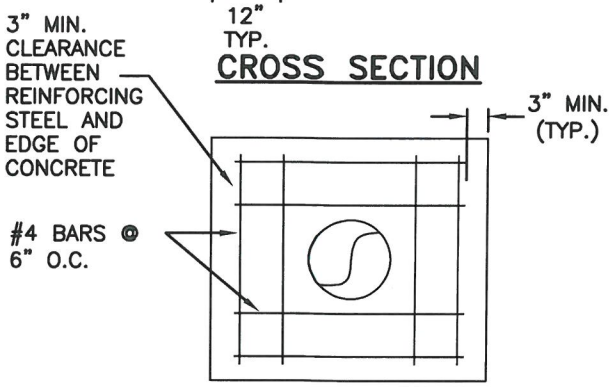

REINFORCING STEEL PATTERN

NOTES:

1. SLOPE GREATER THAN 10 PERCENT SHALL BE USED BY SPECIAL WRITTEN APPROVAL OF THE DISTRICT.
2. PIPE ANCHORS REQUIRED ON ALL GROUND SLOPES OF 3:1 OR STEEPER.
3. ANCHOR SHALL EXTENT 12-INCHES INTO NATURAL UNDISTURBED SOIL.
4. CONCRETE SHALL BE 560-C-3250 WITH 4-INCH MAXIMUM SLUMP.
5. ANCHORS FOR TRAPEZOIDAL TRENCH SECTIONS WILL CONFORM TO TRENCH CROSS SECTION AND EXTEND 12-INCHES INTO UNDISTURBED SOIL.

Camarillo Sanitary District
601 Carmen Drive
Camarillo, CA 93010
(805) 388-5340

CONCRETE SLOPE ANCHORS

Reviewed: 3/26/2015
Sanitary Superintendent — Date

Approved: Matthew Tucker 3/31/15
City Engineer — Date

REVISIONS	BY	DATE

STD. PLATE 19

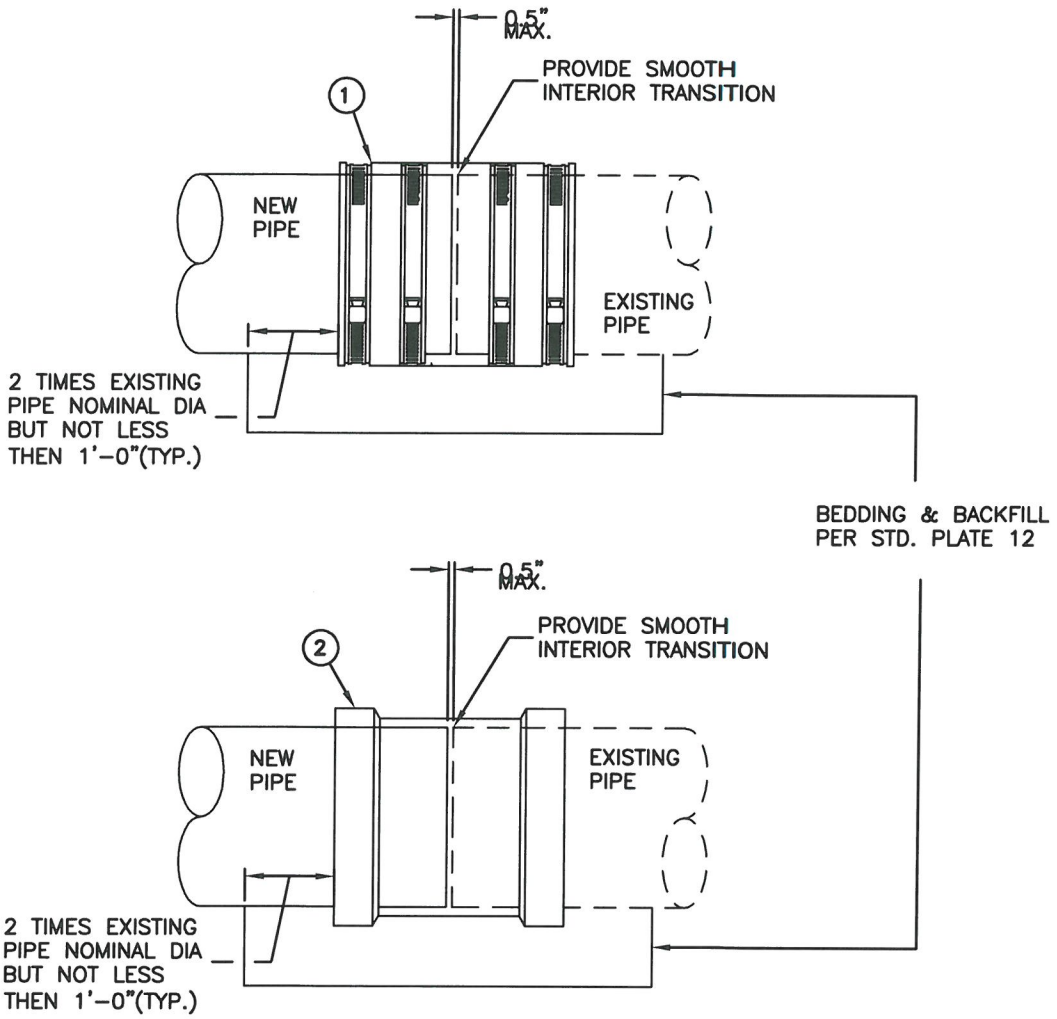

ELEVATION

(1) FOR VCP CLOSURES, STAINLESS STEEL SHEAR RING REPAIR COUPLINGS SHALL BE USED (AS MANUFACTURED BY MISSION RUBBER AND, GLADDING McBEAN OR EQUAL).

(2) PVC PIPE CLOSURE SHALL BE SDR 26 GASKET x GASKET COUPLING (HARCO 509, OR EQUAL).

Camarillo Sanitary District
601 Carmen Drive
Camarillo, CA 93010
(805) 388-5340

GRAVITY PIPE FIELD CLOSURE

Reviewed: 3/26/2015
Sanitary Superintendent — Date

Approved: 3/31/15
City Engineer — Date

REVISIONS	BY	DATE

STD. PLATE 20

BOLTED COVER–HUB INLET–SPIGOT OUTLET

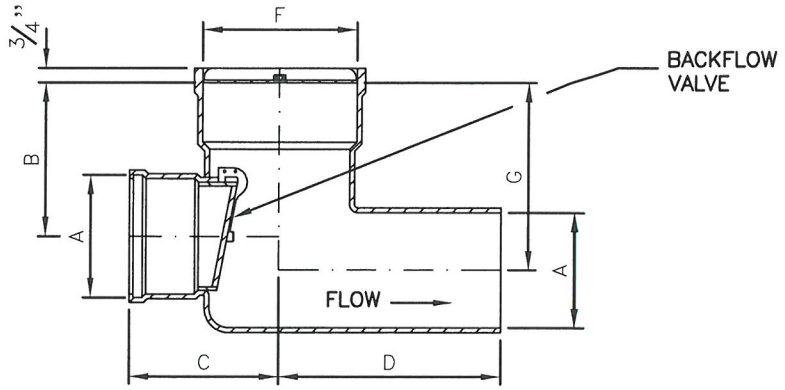

THREADED COVER–HUB INLET–SPIGOT OUTLET

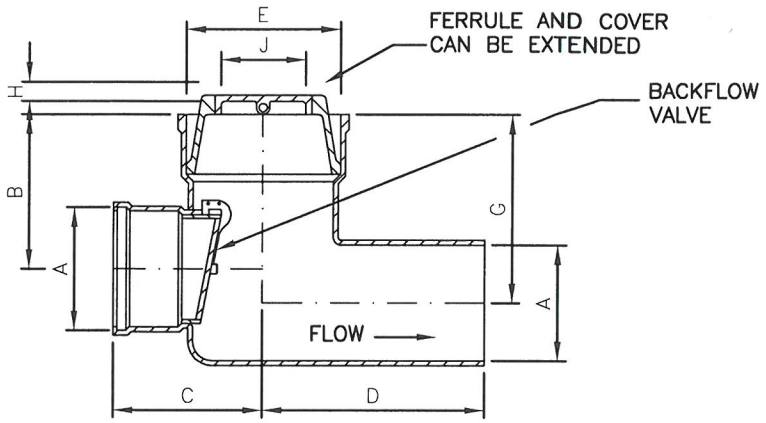

DIMENSIONS (INCHES)								
A SIZE	B	C	D	E SIZE	F DIA.	G	H	J
4	6.5	6.5	9.5	6	8.5	8	1	5
6	8	7.75	11.5	8	10.5	7.5	1	5

NOTES:

1. BACKFLOW DEVICE SHALL BE INSTALLED IN THE SEWER SERVING ANY BUILDING WHERE THE LOWEST FLOOR ELEVATION (CONTAINING PLUMBING FIXTURES) WILL BE LESS THAN 1–FOOT ABOVE THE RIM OF THE UPSTREAM MANHOLE OR FLUSHING UNIT.
2. DEVICE SHALL BE LOCATED WHERE IT WILL BE ACCESSIBLE FOR INSPECTION AND REPAIR AT ALL TIMES.
3. DEVICE SHALL BE J.R. SMITH MFG. CO. 7012 (BOLTED) OR 7022 (THREADED) OR APPROVED EQUAL.
4. DEVICE SHALL BE INSTALLED IN A VAULT (QUICKSET DB2424 OR EQUAL).
5. IF DEPTH TO LATERAL IS 4' OR GREATER, THEN DEVICE SHALL BE RECTORSEAL – CLEAN CHECK EXTENDABLE BACKWATER VALVE OR APPROVED EQUAL.

Camarillo Sanitary District
601 Carmen Drive
Camarillo, CA 93010
(805) 388–5340

SEWER BACKFLOW DEVICE

Reviewed: 3/26/2015
Sanitary Superintendent — Date

Approved: 3/31/15
City Engineer — Date

REVISIONS	BY	DATE

STD. PLATE 21

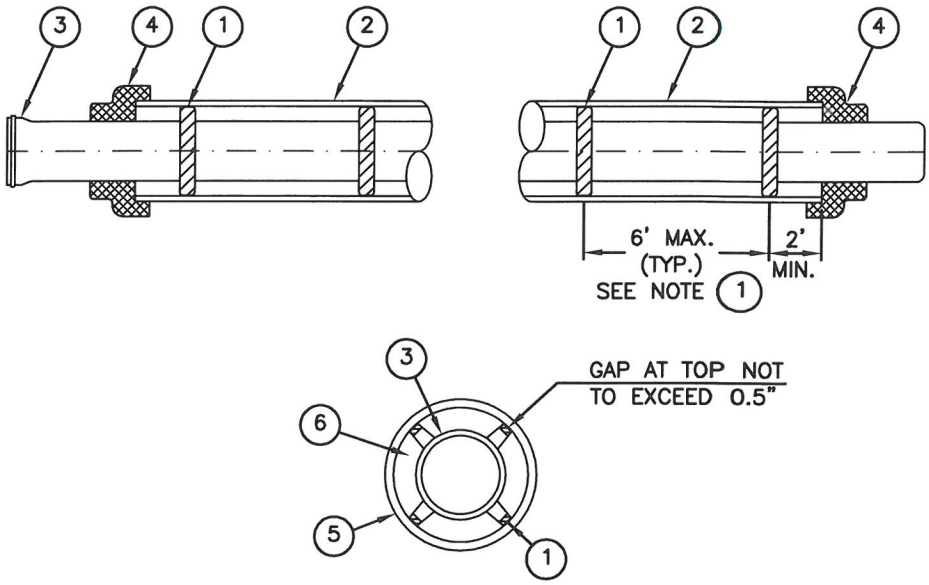

STEEL CASING DETAILS

1. STAINLESS STEEL CASING SPACER CENTER RESTRAINT POSITION (CASCADE MFG. OR EQUAL) SHALL BE ATTACHED TO CARRIER PIPE AT APPROPRIATE POSITIONS TO PROPERLY SUPPORT THE CARRIER PIPE WITHIN THE CENTER OF THE CASING INSTALLATION. SPACERS SHALL BE SET AT 6-FOOT INTERVALS FOR PVC AND DUCTILE IRON PIPE. A MINIMUM OF TWO (2) SPACERS PER JOINT SHALL BE PROVIDED FOR VCP.
2. ALL JOINTS OF STEEL CASING SHALL BE WELDED FULL CIRCUMFERENCE, MINIMUM CASING I.D. AND WALL THICKNESS SHALL BE 24-INCHES AND ½-INCH RESPECTIVELY, UNLESS APPROVED OTHERWISE BY THE CITY ENGINEER.
3. CARRIER PIPE SHALL BE PVC SDR 26, EXTRA STRENGTH VITRIFIED CLAY OR CERAMIC EPOXY LINED DUCTILE IRON PIPE, AS APPROVED BY THE CITY ENGINEER. CARRIER PIPE SHALL BE AIR TESTED PRIOR TO FILLING OF ANNULAR SPACE. INVERT ELEVATIONS SHALL BE VERIFIED PRIOR TO FILLING OF ANNULAR SPACE.
4. EACH END OF CASING SHALL BE SEALED WITH CONCRETE MORTAR OR MANUFACTURED CASING END COVER.
5. PERIPHERY OF CASING SHALL BE PRESSURE GROUTED.
6. ANNULAR SPACE SHALL BE FILLED WITH LEAN GROUT.
7. STEEL CASING SHALL BE CATHODICALLY PROTECTED.

NOTE:

UNLESS NOTED OTHERWISE, CASING SHALL BE INSTALLED BY JACK AND BORE, AND/OR TUNNEL METHOD. IF OPEN-CUT INSTALLATION OF CASING IS ALLOWED, BACKFILL SHALL BE IN ACCORDANCE WITH STD. PLATE 12.

Camarillo Sanitary District
601 Carmen Drive
Camarillo, CA 93010
(805) 388-5340

STEEL CASING

Reviewed: 3/26/2015
Sanitary Superintendent — Date

Approved: Mathew Tucker 3/31/15
City Engineer — Date

REVISIONS	BY	DATE

STD. PLATE 22

SHT. 1 OF 2

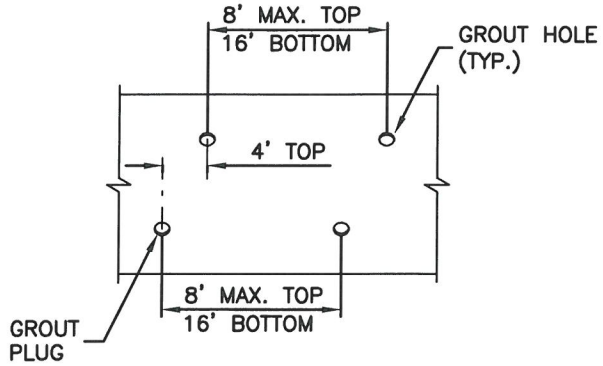

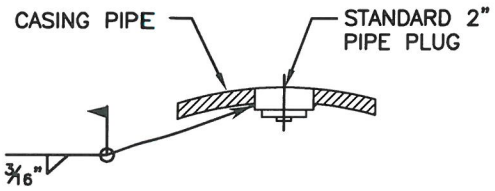

GROUT PLUG DETAIL

CARRIER PIPE SIZE (INCHES)	MIN. CASING SIZE (INCHES)
8–15	24
18	30
21	33
24	36

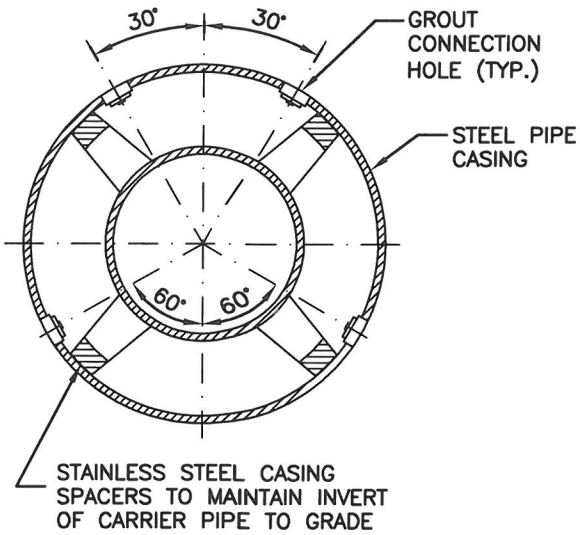

STEEL CASING DETAIL

Camarillo Sanitary District
601 Carmen Drive
Camarillo, CA 93010
(805) 388-5340

STEEL CASING

Reviewed: 3/26/2015
Sanitary Superintendent — Date

Approved: Maffalda Tucker 3/31/15
City Engineer — Date

REVISIONS	BY	DATE

STD. PLATE
22
SHT. 2 OF 2

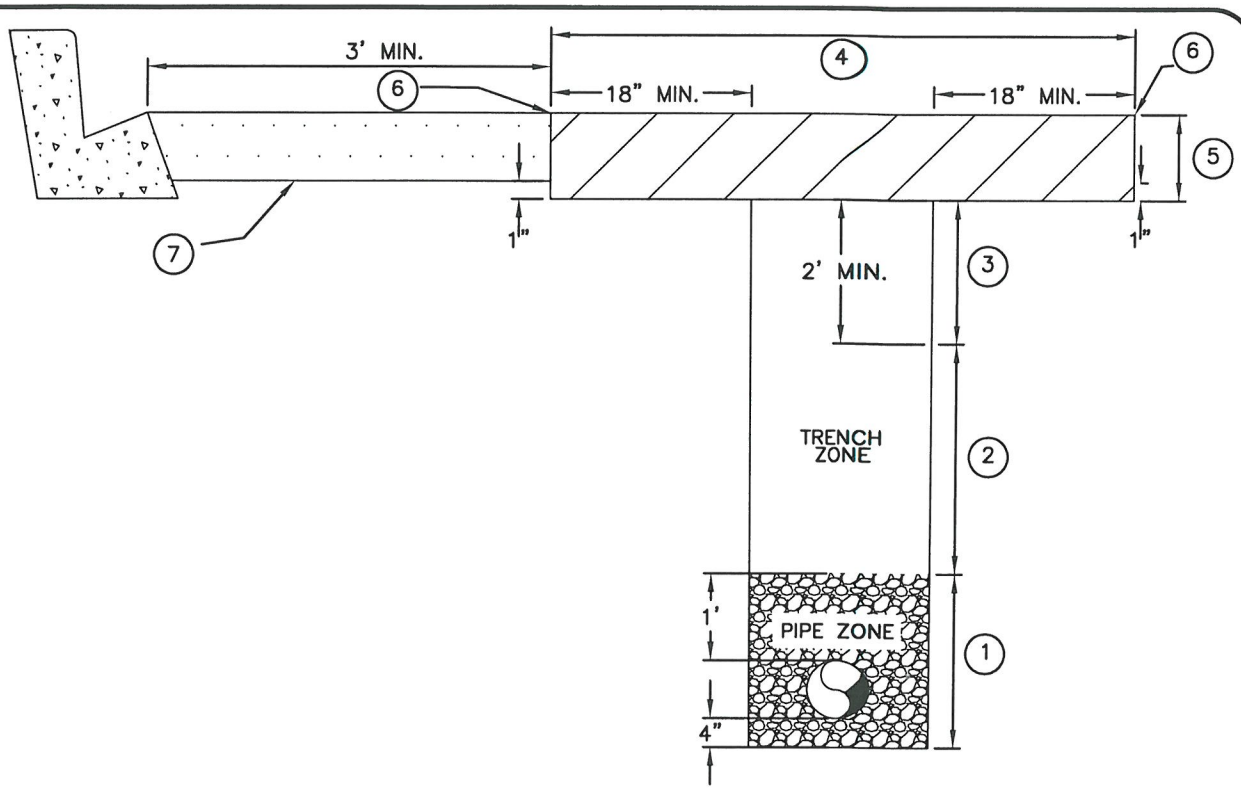

1. PIPE BEDDING AND PIPE ZONE BACKFILL TO BE PLACED PER STD. PLATE 12.

2. TRENCH BACKFILL TO BE NATIVE, IMPORT OR ONE (1) SACK CEMENT SLURRY MATERIAL. NATIVE OR IMPORT BACKFILL MATERIAL TO BE PLACED AT 90 PERCENT RELATIVE COMPACTION, CERTIFIED BY AN INDEPENDENT SOILS LABORATORY PER "GREENBOOK" SSPWC STANDARD 306-1.3.

3. A MINIMUM OF THE TOP 2-FEET OF TRENCH TO BE BACKFILLED WITH ONE (1) SACK CEMENT SLURRY. ONE (1) SACK CEMENT SLURRY MAY BE USED FULL DEPTH ABOVE PIPE ZONE, NO TESTING REQUIRED.

4. REPAIR SECTION TO BE COLD PLANED A MINIMUM OF 2-INCHES DEEP AND 18-INCHES BEYOND TRENCH LIMITS ON ALL SIDES.

   ALTERNATE: IF APPROVED BY PUBLIC WORKS INSPECTOR, SAW-CUT A.C. FULL DEPTH AND REMOVE 18-INCHES BEYOND TRENCH ON ALL SIDES.

5. IF A.C. IS SAW-CUT AND FULL DEPTH REMOVED, REPLACE A.C. 1-INCH GREATER THAN EXISTING. MINIMUM THICKNESS FOR FULL DEPTH REPLACEMENT IS 4-INCHES PLACED IN TWO (2) LIFTS PER "GREENBOOK" SSPWC TABLE 302-5.5(A).

6. A.C. JOINTS SHALL BE SEALED WITH SS-1H EMULSION APPLIED AROUND ENTIRE PERIMETER OF REPAIR SECTION.

7. ADJACENT A.C. TO BE PROTECTED IN PLACE BEYOND REPAIR SECTION ON ALL SIDES. DAMAGED A.C. SHALL BE REPAIRED PER NOTE 4.

NOTE: NO "FLOATERS" LESS THAN 3-FEET WILL BE ALLOWED. FLOATER IS THE EXISTING PAVEMENT BETWEEN EDGE OF REPAIR SECTION AND EXISTING EDGE OF GUTTER, EDGE OF PAVEMENT OR CURB.

Camarillo Sanitary District
601 Carmen Drive
Camarillo, CA 93010
(805) 388-5340

UTILITY TRENCH REPAIR WITHIN EXISTING PAVEMENT AREA

Reviewed: 3/26/2015
Sanitary Superintendent — Date

Approved: Maffalia Tucker 3/31/15
City Engineer — Date

REVISIONS	BY	DATE

STD. PLATE 23

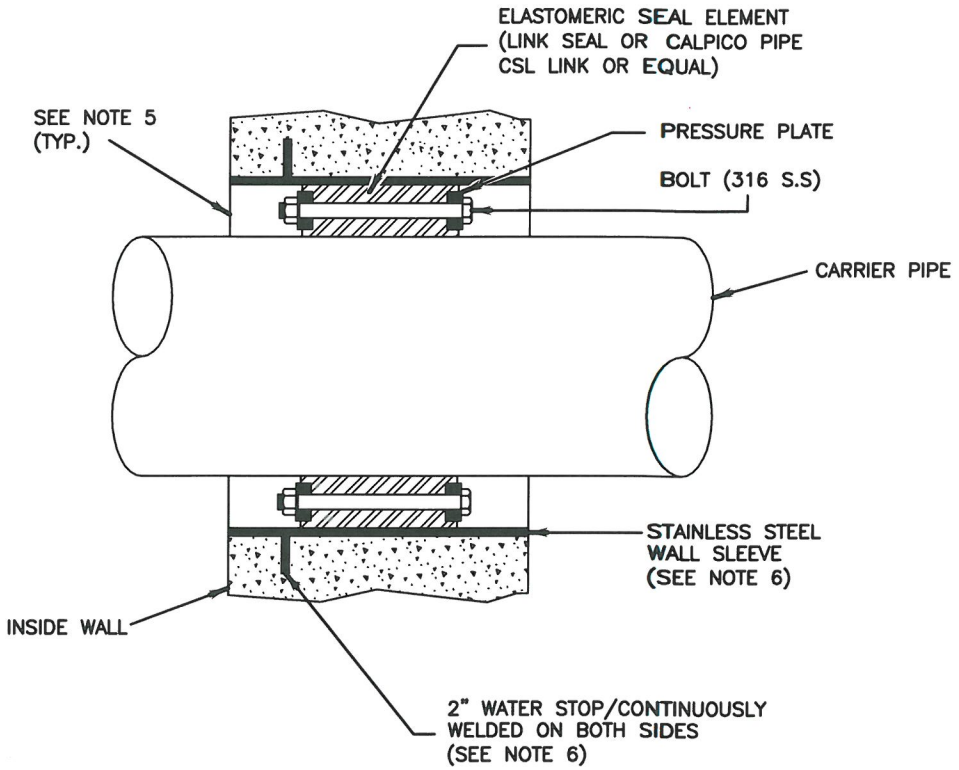

NOTES:

1. THE PENETRATION SEAL SHALL BE MADE OF MECHANICALLY INTERLOCKED, SOLID EPDM RUBBER LINKS WITH 316 STAINLESS STEEL BOLTS, AS MANUFACTURED BY LINK SEAL AND/OR CALPICO PIPE CSL OR EQUAL.
2. PENETRATION THROUGH WALL SHALL BE MADE WATERTIGHT.
3. ALL PENETRATIONS REQUIRING WATER-STOP AND ANCHOR COLLAR SHALL BE SET PRIOR TO CONCRETE BEING POURED.
4. CORE DRILLING WILL BE ALLOWED WITH PRIOR APPROVAL OF THE CITY ENGINEER.
5. LINKS SHALL BE INSTALLED FAR ENOUGH INTO PENETRATION TO ACCOMMODATE A LAYER OF "BUBBLE WRAP" AND GROUT ON BOTH SIDES FOR FUTURE ACCESS TO THE LINKS/BOLTS.
6. WALL SLEEVE/ANCHOR COLLAR SHALL BE CONSTRUCTED FROM 316 STAINLESS STEEL, WITH A 2-INCH WATER-STOP THAT SHALL BE CONTINUOUSLY WELDED ON BOTH SIDES, AS MANUFACTURED BY LINK SEAL MODEL WS 316 SS OR EQUAL.

Camarillo Sanitary District
601 Carmen Drive
Camarillo, CA 93010
(805) 388-5340

PIPE WALL PENETRATION SEAL

Reviewed: 3/26/2015
Sanitary Superintendent — Date

Approved: Maffalia Tucker 3/31/15
City Engineer — Date

REVISIONS	BY	DATE

STD. PLATE
24

CALIFORNIA DEPARTMENT OF PUBLIC HEALTH, CRITERIA FOR WATER MAIN SEPARATION [SECTION 64572]

THE CALIFORNIA DEPARTMENT OF PUBLIC HEALTH IS CONCERNED ABOUT WATERBORNE DISEASE OUTBREAKS ATTRIBUTED TO THE ENTRY OF SEWAGE-CONTAMINATED GROUNDWATER IN TO THE DISTRIBUTION SYSTEMS OF PUBLIC WATER SUPPLIES. THEREFORE, SEWERS IN CLOSE PROXIMITY TO WATER MAINS SHALL BE REVIEWED WITH THE CALIFORNIA DEPARTMENT OF PUBLIC HEALTH.

NEW SEWERS SHALL NOT BE INSTALLED IN THE SAME TRENCH AS, AND SHALL BE AT LEAST 10-FEET HORIZONTALLY FROM AND 1-FOOT VERTICALLY BELOW ANY PARALLEL PIPELINE CONVEYING POTABLE WATER.

IF CROSSING A PIPELINE CONVEYING WATER, SEWERS SHALL BE CONSTRUCTED NO LESS THAN 45 DEGREES TO, AND AT LEAST 1-FOOT BELOW, THAT PIPELINE. NO CONNECTION JOINT SHALL BE ALLOWED IN THE WATER MAIN WITHIN 8 HORIZONTAL FEET OF THE SEWERS.

IN ALL CASES, THE SEWERS SHALL BE INSTALLED IN A MANNER THAT MINIMIZES THE POTENTIAL FOR CONTAMINATION, INCLUDING (BUT NOT LIMITED TO) SLEEVING AND/OR UTILIZING UPGRADED PIPING MATERIALS.

WHEN NEW WATER MAINS, NEW SANITARY SEWER MAINS, OR OTHER NON-POTABLE, FLUID-CARRYING PIPELINES ARE BEING INSTALLED IN EXISTING DEVELOPED AREAS, LOCAL CONDITIONS (E.G., AVAILABLE SPACE, LIMITED SLOPE, EXISTING STRUCTURES) MAY CREATE A SITUATION IN WHICH THERE IS NO ALTERNATIVE BUT TO INSTALL WATER MAINS, SANITARY SEWER MAINS, OR OTHER NON-POTABLE PIPELINES AT A DISTANCE LESS THAN THAT REQUIRED BY THE REGULATIONS [SECTION 64572]. IN SUCH CASES, THROUGH PERMIT ACTION, THE DEPARTMENT MAY APPROVE ALTERNATIVE CONSTRUCTION CRITERIA. THE ALTERNATIVE APPROACH IS ALLOWED UNDER SECTION 64551.100.

A WATER/SEWER SYSTEM THAT PROPOSES TO USE AN ALTERNATIVE TO THE REQUIREMENTS IN THIS CHAPTER SHALL:

1. DEMONSTRATE TO THE DEPARTMENT OF PUBLIC HEALTH THAT THE PROPOSED ALTERNATIVE WOULD PROVIDE AT LEAST THE SAME LEVEL OF PROTECTION TO THE PUBLIC HEALTH; AND
2. OBTAIN WRITTEN APPROVAL FROM THE DEPARTMENT OF PUBLIC HEALTH PRIOR TO THE ALTERNATIVE.

APPROPRIATE ALTERNATIVE CONSTRUCTION CRITERIA FOR TWO DIFFERENT CASES IN WHICH THE REGULATORY CRITERIA FOR SANITARY SEWER MAIN AND WATER MAIN SEPARATION CANNOT BE MET ARE SHOWN IN FIGURES 1 AND 2 ON SHEETS 6 AND 7 OF 7.

CASE 1 – NEW SANITARY SEWER MAIN AND A NEW OR EXISTING WATER MAIN; ALTERNATIVE CONSTRUCTION CRITERIA APPLY TO THE SANITARY SEWER MAIN.

CASE 2 – NEW WATER MAIN AND AN EXISTING SANITARY SEWER MAIN; ALTERNATIVE CONSTRUCTION CRITERIA MAY APPLY TO EITHER OR BOTH THE WATER MAIN AND SANITARY SEWER MAIN.

Camarillo Sanitary District
601 Carmen Drive
Camarillo, CA 93010
(805) 388-5340

WATER AND SEWER SEPARATION

Reviewed: 3/26/2015
Sanitary Superintendent — Date

Approved: 3/31/15
City Engineer — Date

REVISIONS	BY	DATE

STD. PLATE 25

SHT. 1 OF 7

CASE 1: NEW SANITARY SEWER MAIN INSTALLATION

(FOR THE FOLLOWING ZONES, REFER TO FIGURES 1 AND 2 ON SHEETS 6 AND 7 OF 7)

SPECIAL CONSTRUCTION REQUIRED FOR SANITARY SEWER MAIN

ZONE A SANITARY SEWER MAINS PARALLEL TO WATER MAINS SHALL NOT BE PERMITTED IN THIS ZONE WITHOUT PRIOR WRITTEN APPROVAL FROM THE CALIFORNIA DEPARTMENT OF PUBLIC HEALTH AND THE CITY OF CAMARILLO DEPARTMENT OF PUBLIC WORKS.

ZONE B IF THE WATER MAIN PARALLELING THE SANITARY SEWER MAIN DOES NOT MEET THE CASE 2 ZONE B REQUIREMENTS, THE SANITARY SEWER MAIN SHALL BE CONSTRUCTED OF ONE OF THE FOLLOWING:

1. HIGH–DENSITY–POLYETHYLENE (HDPE) PIPE WITH FUSION WELDED JOINTS (PER LATEST EDITION AWWA C906);
2. SPIRALLY–REINFORCED HDPE PIPE WITH GASKETED JOINTS (PER ASTM F–894);
3. EXTRA STRENGTH VITRIFIED CLAY PIPE WITH COMPRESSION JOINTS;
4. SDR 26 PVC SEWER PIPE WITH RUBBER RING JOINTS (PER ASTM D3034) OR EQUIVALENT;
5. CERAMIC EPOXY LINED (PROTECO 401 OR EQUAL) DUCTILE IRON PIPE WITH COMPRESSION JOINTS;

CAMARILLO SANITARY DISTRICT SHALL SELECT THE PIPE MATERIAL TO BE USED.

ZONE C IF THE WATER MAIN <u>CROSSING BELOW THE SANITARY SEWER MAIN</u> DOES NOT MEET REQUIREMENTS FOR CASE 2 ZONE C, THE SANITARY SEWER MAIN SHALL HAVE NO JOINTS WITHIN 10 FEET FROM EITHER SIDE OF THE WATER MAIN (IN ZONE C) AND SHALL BE CONSTRUCTED OF ONE OF THE FOLLOWING:

1. A CONTINUOUS SECTION OF DUCTILE IRON PIPE WITH CERAMIC EPOXY LINING (PROTECTO 401 OR EQUAL) AND BITUMINOUS COATING AND POLYETHYLENE ENCASEMENT PER AWWA C105; OR
2. ONE OF THE ZONE D OPTIONS 1, 3, 4, OR 5 BELOW.

ZONE D IF THE WATER MAIN <u>CROSSING ABOVE THE SANITARY SEWER MAIN</u> DOES NOT MEET THE CASE 2 ZONE D REQUIREMENTS, THE SANITARY SEWER MAIN SHALL HAVE NO JOINTS WITHIN FOUR FEET FROM EITHER SIDE OF THE WATER MAIN (IN ZONE D) AND BE CONSTRUCTED OF ONE OF THE FOLLOWING:

1. HDPE PIPE WITH FUSION–WELDED JOINTS (PER LATEST EDITION OF AWWA C906);
2. CERAMIC EPOXY (PROTECTO 401 OR EQUAL) LINED DUCTILE IRON PIPE WITH HOT DIP BITUMINOUS COATING AND POLYETHYLENE ENCASEMENT PER AWWA C105, AND MECHANICAL JOINTS (GASKETED, BOLTED JOINTS);
3. A CONTINUOUS SECTION OF CLASS 200 (DR 14 PER AWWA C900) PVC PIPE OR EQUIVALENT, CENTERED OVER THE PIPE BEING CROSSED;

Camarillo Sanitary District
601 Carmen Drive
Camarillo, CA 93010
(805) 388–5340

WATER AND SEWER SEPARATION

Reviewed: 3/26/2015
Sanitary Superintendent Date

Approved: 3/31/15
City Engineer Date

REVISIONS	BY	DATE

STD. PLATE 25

4. ANY SANITARY SEWER MAIN WITHIN A CONTINUOUS SLEEVE;

CAMARILLO SANITARY DISTRICT SHALL SELECT THE PIPE MATERIAL TO BE USED.

CASE 2: NEW WATER MAINS

(FOR THE FOLLOWING ZONES, REFER TO FIGURES 1 AND 2 ON SHEETS 6 AND 7 OF 7)

SPECIAL CONSTRUCTION REQUIRED FOR WATER MAIN

ZONE A NO WATER MAINS PARALLEL TO SANITARY SEWER MAINS SHALL BE CONSTRUCTED WITHOUT PRIOR WRITTEN APPROVAL FROM THE CALIFORNIA DEPARTMENT OF PUBLIC HEALTH AND THE CITY OF CAMARILLO DEPARTMENT OF PUBLIC WORKS.

ZONE B IF THE SANITARY SEWER MAIN PARALLELING THE WATER MAIN DOES NOT MEET THE CASE 1 ZONE B REQUIREMENTS, THE WATER MAIN SHALL BE CONSTRUCTED OF ONE OF THE FOLLOWING:

1. HDPE PIPE WITH FUSION–WELDED JOINTS (PER LATEST EDITION OF AWWA C906);
2. DUCTILE IRON PIPE WITH HOT DIP BITUMINOUS COATING;
3. DIPPED AND WRAPPED ONE–FOURTH–INCH–THICK WELDED STEEL PIPE;
4. CLASS 200 PRESSURE RATED PVC WATER PIPE (DR 14 PER LATEST EDITIONS OF AWWA C900 & C905) OR EQUIVALENT;

CAMARILLO WATER DIVISION SHALL SELECT THE PIPE MATERIAL TO BE USED.

ZONE C IF THE SANITARY SEWER MAIN CROSSING ABOVE THE WATER MAIN DOES NOT MEET CASE 1 ZONE C REQUIREMENTS, THE WATER MAIN SHALL HAVE NO JOINTS WITHIN TEN FEET FROM EITHER SIDE OF THE SANITARY SEWER MAIN (IN ZONE C) AND BE CONSTRUCTED OF ONE OF THE FOLLOWING:

1. HDPE PIPE WITH FUSION–WELDED JOINTS (PER LATEST EDITION OF AWWA C906);
2. DUCTILE IRON PIPE WITH HOT DIP BITUMINOUS COATING;
3. DIPPED AND WRAPPED ONE–FOURTH–INCH–THICK WELDED STEEL PIPE;
4. CLASS 200 PRESSURE RATED PVC WATER PIPE (DR 14 PER LATEST EDITIONS OF AWWA C900 & C905);

CAMARILLO WATER DIVISION SHALL SELECT THE PIPE MATERIAL TO BE USED.

ZONE D IF THE SANITARY SEWER MAIN CROSSING BELOW THE WATER MAIN DOES NOT MEET REQUIREMENTS FOR CASE 1 ZONE D, THE WATER MAIN SHALL HAVE NO JOINTS WITHIN EIGHT FEET FROM EITHER SIDE OF THE SANITARY SEWER MAIN (IN ZONE D) AND BE CONSTRUCTED AS FOR ZONE C.

Camarillo Sanitary District
601 Carmen Drive
Camarillo, CA 93010
(805) 388–5340

WATER AND SEWER SEPARATION

Reviewed: 3/26/2015
Sanitary Superintendent Date

Approved: 3/31/15
City Engineer Date

REVISIONS	BY	DATE

STD. PLATE 25

SHT. 3 OF 7

WATER MAINS AND PIPELINES CONVEYING NON-POTABLE FLUIDS

WHEN THE BASIC SEPARATION CRITERIA CANNOT BE MET BETWEEN WATER MAINS AND PIPELINES CONVEYING NON-POTABLE FLUIDS, THE REQUIREMENTS FOR SELECTING SPECIAL CONSTRUCTION MATERIALS AND THE SEPARATION REQUIREMENTS (SHOWN ON FIGURES 1 AND 2 SHEETS 6 AND 7 OF 7) NOTE THAT NOT ALL CONSTRUCTION MATERIALS ALLOWED FOR SANITARY SEWER MAINS WILL BE APPROPRIATE FOR OTHER NON-POTABLE FLUID LINES. FOR EXAMPLE, CERTAIN PLASTIC LINES MAY NOT BE APPROPRIATE FOR THE TRANSPORT OF SOME FUEL PRODUCTS. THE SELECTION OF COMPATIBLE MATERIALS OF CONSTRUCTION FOR NON-POTABLE FLUIDS IS A DECISION TO BE MADE BY THE PROJECT ENGINEER, SUBJECT TO APPROVAL BY THE CITY OF CAMARILLO DEPARTMENT OF PUBLIC WORKS.

WATERMAINS AND SEWAGE FORCE MAINS

- SEWAGE FORCE MAINS SHALL NOT BE INSTALLED WITHIN 10 FEET (HORIZONTALLY) OF A WATER MAIN.
- WHEN A SEWAGE FORCE MAIN MUST CROSS A WATER MAIN, THE CROSSING SHALL BE AS CLOSE AS PRACTICAL TO THE PERPENDICULAR. THE SEWAGE FORCE MAIN SHALL BE AT LEAST 1-FOOT BELOW THE WATER MAIN.
- WHEN A NEW SEWAGE FORCE MAIN CROSSES UNDER AN EXISTING WATER MAIN, AND A ONE-FOOT VERTICAL SEPARATION CANNOT BE PROVIDED, ALL PORTIONS OF THE SEWAGE FORCE MAIN WITHIN 8-FEET (HORIZONTALLY) OF THE OUTSIDE WALLS OF THE WATER MAIN SHALL BE ENCLOSED IN A CONTINUOUS SLEEVE. IN THESE CASES, A MINIMUM VERTICAL SEPARATION DISTANCE OF 4-INCHES SHALL BE MAINTAINED BETWEEN THE OUTSIDE EDGE OF THE BOTTOM OF THE WATER MAIN AND THE TOP OF THE CONTINUOUS SLEEVE.
- WHEN A NEW WATER MAIN CROSSES OVER AN EXISTING SEWAGE FORCE MAIN, THE WATER MAIN SHALL BE CONSTRUCTED OF PIPE MATERIALS WITH A MINIMUM RATED WORKING PRESSURE OF 200 PSIG OR THE EQUIVALENT.

WATER MAINS AND TERTIARY TREATED RECYCLED WATER OR STORM DRAINAGE

THE BASIC SEPARATION CRITERIA FOR WATER MAINS AND PIPELINES CONVEYING TERTIARY TREATED RECYCLED WATER OR STORM DRAINAGE LINES ARE A 4-FOOT HORIZONTAL SEPARATION WHERE LINES ARE RUNNING PARALLEL, AND A 1-FOOT VERTICAL SEPARATION (WATER LINE ABOVE RECYCLED OR STORM DRAINAGE) WHERE THE LINES CROSS EACH OTHER.

WHEN THESE CRITERIA CANNOT BE MET, THE ZONE A CRITERIA APPLY WHERE LINES ARE RUNNING PARALLEL, AND THE ZONE C AND ZONE D CRITERIA APPLY WHERE THE LINES CROSS EACH OTHER (AS SHOWN ON FIGURES 1 AND 2 SHEET 6 AND 7 OF 7). FOR THESE SITUATIONS, THE ZONE "P" CRITERIA ARE IN EFFECT AND PROHIBIT CONSTRUCTION LESS THAN 1-FOOT IN PARALLEL INSTALLATIONS AND LESS THAN 4-INCHES IN VERTICAL (CROSSING) SITUATIONS.

FOR TERTIARY TREATED RECYCLED WATER AND STORM DRAINAGE LINES, THE ZONE B CRITERIA (REQUIREMENTS FOR SPECIAL PIPE) DO NOT APPLY AS THE BASIC SEPARATION CRITERIA IS A FOUR-FOOT HORIZONTAL SEPARATION CRITERIA FOR PARALLEL LINES. THE TERTIARY TREATED RECYCLED WATER LINES SHALL BE CONSTRUCTED IN ACCORDANCE WITH THE COLOR-CODING, AND LABELING REQUIREMENTS PER SECTION 116815, CALIFORNIA HEALTH AND SAFETY CODE OF REGULATIONS.

Camarillo Sanitary District
601 Carmen Drive
Camarillo, CA 93010
(805) 388-5340

WATER AND SEWER SEPARATION

Reviewed: 3/26/2015
Sanitary Superintendent — Date

Approved: Matthew Tucker 3/31/15
City Engineer — Date

REVISIONS	BY	DATE

STD. PLATE 25

SHT. 4 OF 7

MISCELLANEOUS GUIDANCE

- MORE STRINGENT REQUIREMENTS MAY BE NECESSARY IF CONDITIONS SUCH AS HIGH GROUNDWATER EXIST. HDPE OR SIMILAR PIPE MAY BE REQUIRED TO PROVIDE FLEXIBILITY TO MOVE WITHOUT POTENTIAL JOINT LEAKS.
- SANITARY SEWER MAINS SHALL NOT BE INSTALLED WITHIN 25-FEET HORIZONTALLY OF A LOW HEAD (5 PSIG OR LESS PRESSURE) WATER MAIN.
- NEW WATER MAINS AND SANITARY SEWER MAINS SHALL BE PRESSURE TESTED IN ACCORDANCE WITH THE CITY OF CAMARILLO WATER DIVISION/CAMARILLO SANITARY DISTRICT REQUIREMENTS.
- WHEN INSTALLING WATER MAINS, SEWERS, OR OTHER PIPELINES, MEASURES SHALL BE TAKEN TO PREVENT OR MINIMIZE DISTURBANCES OF EXISTING PIPELINES. DISTURBANCE OF THE CONDUIT'S SUPPORTING BASE COULD EVENTUALLY RESULT IN PIPELINE FAILURE.
- SPECIAL CONSIDERATION SHALL BE GIVEN TO THE SELECTION OF PIPE MATERIALS IF CORROSIVE CONDITIONS ARE LIKELY TO EXIST. THESE CONDITIONS MAY BE DUE TO SOIL TYPE AND/OR THE NATURE OF THE FLUID CONVEYED IN THE CONDUIT, SUCH AS A SEPTIC SEWAGE PRODUCING CORROSIVE HYDROGEN SULFIDE.

NOTE: DIMENSIONS ARE FROM THE OUTSIDE OF THE WATER MAIN TO THE OUTSIDE OF THE OTHER PIPELINE, MANHOLE, OR SLEEVE.

Camarillo Sanitary District
601 Carmen Drive
Camarillo, CA 93010
(805) 388-5340

WATER AND SEWER SEPARATION

Reviewed: 3/26/2015
Sanitary Superintendent — Date

Approved: 3/31/15
City Engineer — Date

REVISIONS	BY	DATE

STD. PLATE 25

SHT. 5 OF 7

FIGURE 1

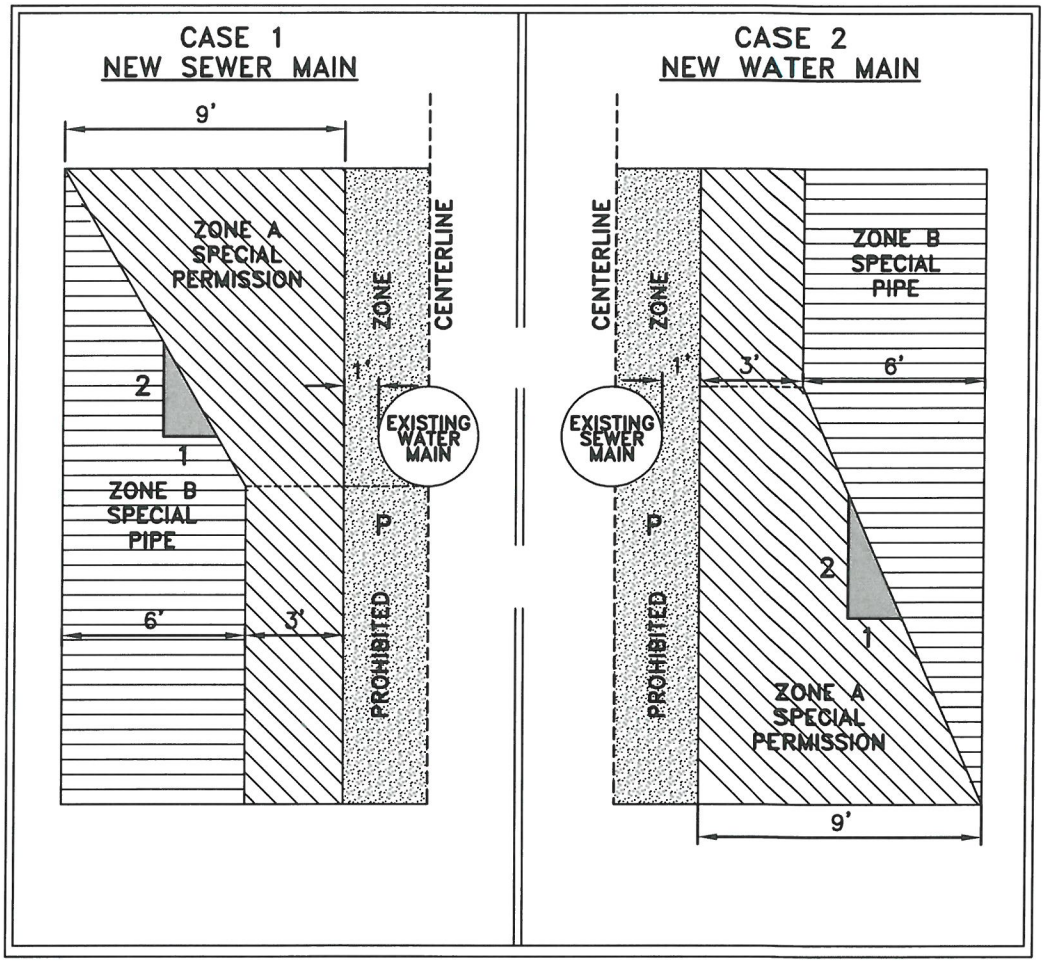

NOTE:

ZONE IDENTICAL ON EITHER SIDE OF CENTER LINES.

ZONE "P" IS A PROHIBITED ZONE. SECTION 64630(e)(2) CALIFORNIA CODE OF REGULATIONS, TITLE 22 (CURRENT); OR SECTION 64572(a) CALIFORNIA CODE OF REGULATIONS, TITLE 22 (PROPOSED).

Camarillo Sanitary District 601 Carmen Drive Camarillo, CA 93010 (805) 388-5340	WATER AND SEWER SEPARATION				
Reviewed: 3/26/2015 Sanitary Superintendent Date	REVISIONS	BY	DATE	STD. PLATE 25	
Approved: 3/31/15 City Engineer Date				SHT. 6 OF 7	

FIGURE 2

CASE 1: NEW SEWER MAIN

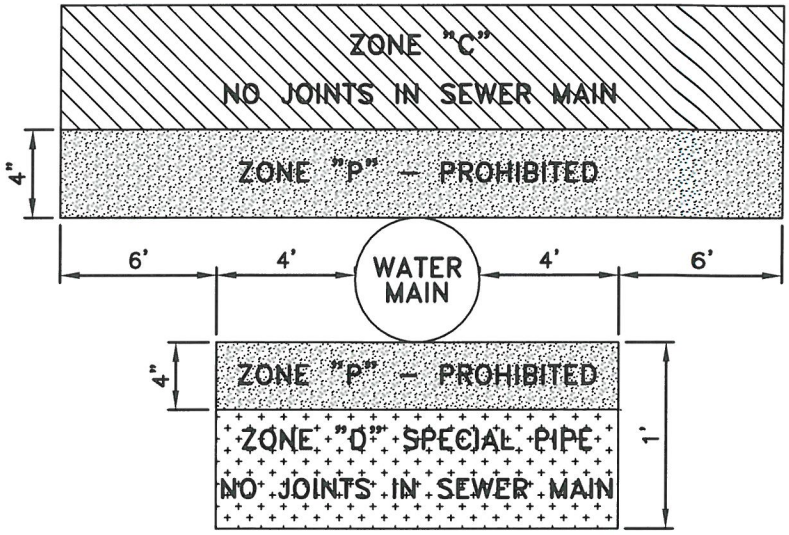

CASE 2: NEW WATER MAIN

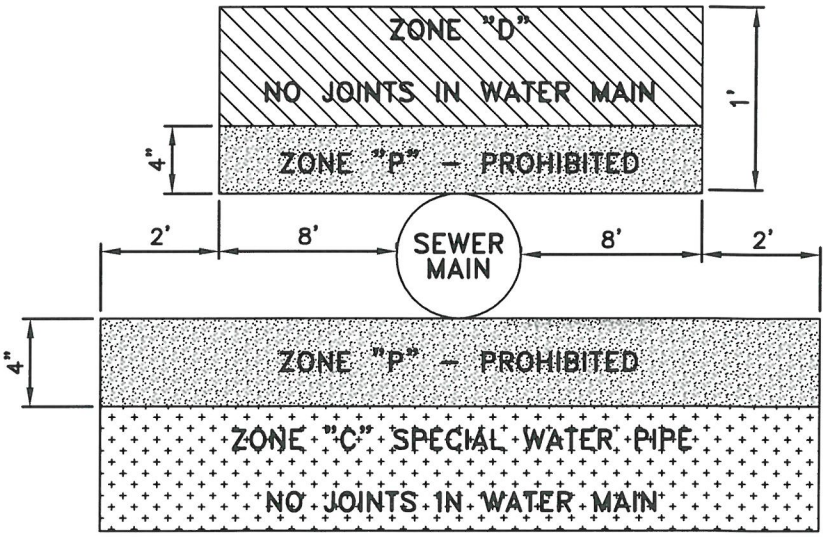

Camarillo Sanitary District 601 Carmen Drive Camarillo, CA 93010 (805) 388-5340	WATER AND SEWER SEPARATION				
Reviewed: 3/26/2015 Sanitary Superintendent Date Approved: 3/31/15 City Engineer Date	REVISIONS	BY	DATE	STD. PLATE 25 SHT. 7 OF 7	

SAND & OIL INTERCEPTORS

1. ALL SERVICE CENTERS WHERE SAND, INERT SOLIDS, OILS (OF A PETROLEUM ORIGIN) FLAMMABLE LIQUIDS OR OTHER SIMILAR SUBSTANCES MAY BE DISCHARGED INTO THE SANITARY SYSTEM SHALL HAVE SAND/OIL INTERCEPTORS APPROVED BY THE CAMARILLO SANITARY DISTRICT (CSD). THE INTERCEPTORS' GROSS LIQUID VOLUME IN GALLONS AT THE STATIC WATER LEVEL SHALL BE NO LESS THAN

   1) 750 GALLONS, OR
   2) THE PEAK FLOW DISCHARGED TO THE INTERCEPTOR IN GALLONS PER MINUTE MULTIPLIED BY THIRTY (30).

   AN EFFLUENT SAMPLING BOX SHALL BE PROVIDED. ALL EXISTING AUTOMOTIVE SERVICE CENTERS SHALL INSTALL A SAND/OIL INTERCEPTOR WITHIN ONE YEAR OF THE DATE OF APPROVAL OF THESE SPECIFICATIONS.

2. CALIFORNIA PLUMBING CODE, SECTION 1016 AND 1017 APPLY WHERE NOT SPECIFICALLY ADDRESSED BY CSD STANDARDS/REQUIREMENTS.

Camarillo Sanitary District
601 Carmen Drive
Camarillo, CA 93010
(805) 388-5340

SAND & OIL INTERCEPTORS

Reviewed: 3/26/2015
Sanitary Superintendent — Date

Approved: Maffakai Tucker 3/31/15
City Engineer — Date

REVISIONS	BY	DATE

STD. PLATE 26

SHT. 1 OF 2

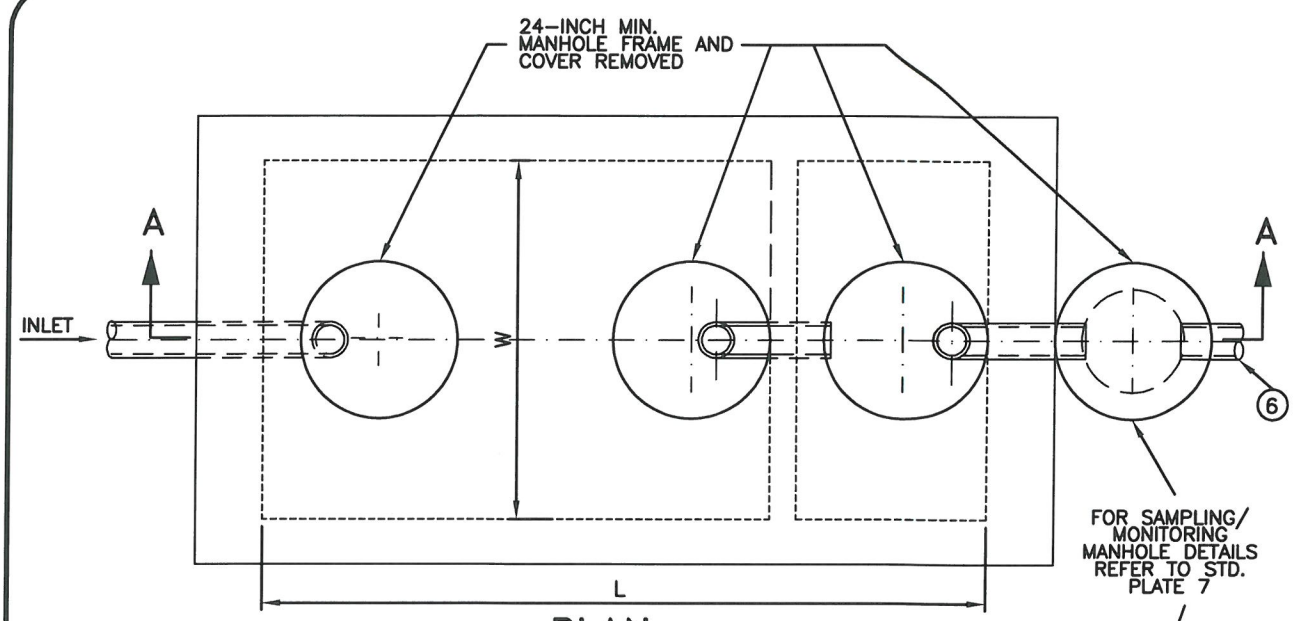

PLAN

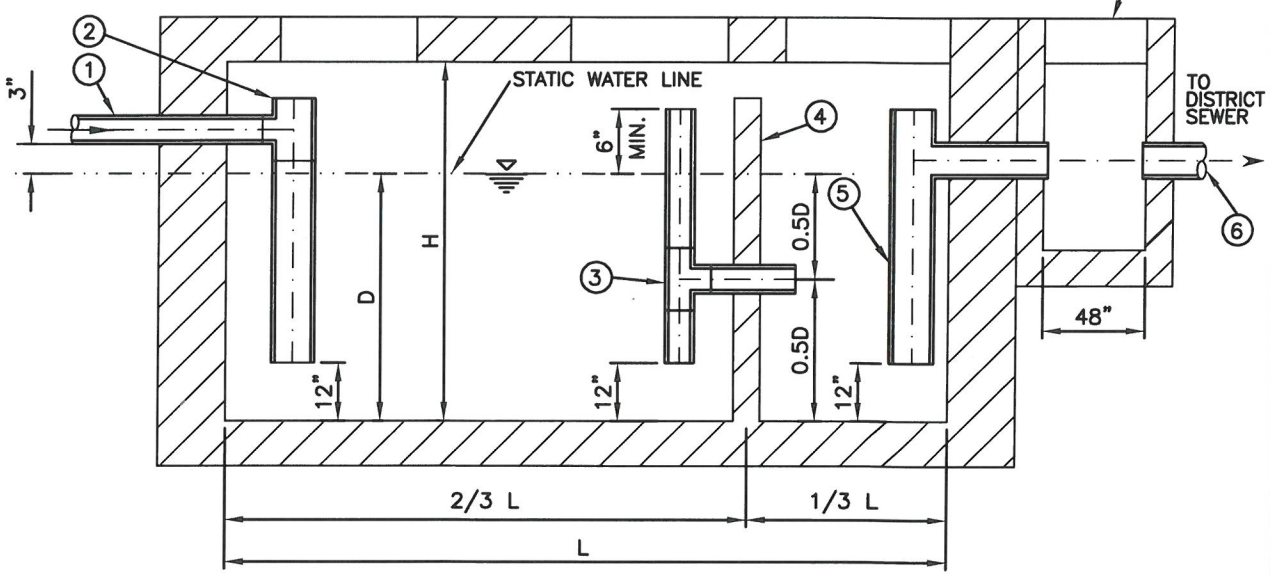

SECTION A–A

1. INLET PIPE PER MANUFACTURER SPECIFICATIONS
2. INFLOW TEE AND STANDPIPE
3. CROSSOVER TEE AND STANDPIPE
4. BAFFLE WALL
5. OUTFLOW TEE AND STANDPIPE
6. OUTLET PIPE–6" MINIMUM

Camarillo Sanitary District
601 Carmen Drive
Camarillo, CA 93010
(805) 388-5340

SAND & OIL INTERCEPTOR

Reviewed: 3/26/2015
Sanitary Superintendent — Date

Approved: Matthew Tucker 3/31/15
City Engineer — Date

REVISIONS	BY	DATE

STD. PLATE 26
SHT. 2 OF 2

GREASE INTERCEPTORS

1. ALL FOOD SERVICE ESTABLISHMENTS SHALL HAVE GREASE CONTROL DEVICES IN ACCORDANCE WITH THE FOG ORDINANCE, FOG CONTROL PROGRAM, AND THESE SPECIFICATIONS.

2. PLANS FOR GREASE CONTROL DEVICES SHALL BE SUBMITTED TO CAMARILLO SANITARY DISTRICT (CSD) FOR APPROVAL PRIOR TO INSTALLATION. ESTABLISHMENTS WHOSE GREASE CONTROL DEVICES ARE NOT ADEQUATELY MAINTAINED TO PREVENT FLOATABLE OILS, FAT, OR CREASE FROM THE SEWER SYSTEM SHALL BE IN VIOLATION OF THE FOG ORDINANCE AND THE FSE'S FOG DISCHARGE PERMIT.

3. CONTINUED VIOLATIONS OF THE CSD OPERATIONS CODE, THE FOG CONTROL PROGRAM OR THESE STANDARDS/REQUIREMENTS BY FOOD SERVICE ESTABLISHMENTS MAY BE CONSIDERED GROUNDS FOR THE SUSPENSION OR REVOCATION OF THE FOG DISCHARGE PERMIT OR THE DISCONTINUANCE OF SEWER OR WATER SERVICES.

4. ALL FOOD SERVICE ESTABLISHMENT GREASE CONTROL DEVICES SHALL BE SUBJECT TO REVIEW, EVALUATION, AND INSPECTION BY CSD REPRESENTATIVES DURING NORMAL WORKING HOURS. RESULTS OF INSPECTION WILL BE MADE AVAILABLE TO FACILITY OWNER, LEASE-HOLDER, OR OPERATOR.

5. FOOD SERVICE ESTABLISHMENTS WHOSE OPERATIONS VIOLATE THE CSD OPERATIONS CODE, THE FOG CONTROL PROGRAM, OR THESE STANDARDS/REQUIREMENTS, OR ESTABLISHMENTS THAT CAUSE OR ALLOW EXCESSIVE GREASE TO BE DISCHARGED OR ACCUMULATE IN CSD COLLECTION SYSTEM BAY BE LIABLE TO CSD FOR COSTS RELATED TO CSD SERVICE CALLS FOR LINE BLOCKAGES, INCREASED LINE MAINTENANCE FREQUENCY, LINE AND PUMP REPAIRS, REGULATORY FINES, ETC., INCLUDING ALL LABOR, MATERIALS, AND EQUIPMENT. FAILURE TO PAY ALL SERVICE-RELATED CHARGES MAY ALSO BE GROUNDS FOR SEWER OR WATER SERVICE DISCONTINUANCE.

6. REGULARLY SCHEDULED MAINTENANCE OF GREASE CONTROL DEVICES IN REQUIRED TO INSURE PROPER OPERATION. IN MAINTAINING GREASE INTERCEPTORS AND GREASE TRAPS, THE FSE OWNER, LEASE-HOLDER, OR OPERATOR SHALL BE RESPONSIBLE FOR THE PROPER REMOVAL AND DISPOSAL OF GREASE BY APPROPRIATE MEANS, AND SHALL MAINTAIN ON-SITE RECORDS OF DATES AND MEANS OF DISPOSAL. RECORDS SHALL BE MAINTAINED FOR A PERIOD OF THREE (3) YEARS.

7. ANY FOOD SERVICE ESTABLISHMENT WHOSE EFFLUENT DISCHARGE TO THE SEWER SYSTEM IS DETERMINED BY CSD TO CAUSE INTERFERENCE IN THE CONVEYANCE OR OPERATION OF THE SEWER SHALL BE ANALYZED FOR OIL AND GREASE AT THE EXPENSE OF THE FSE OWNER, LEASE-HOLDER OR OPERATOR. RESULTS OF FATS ANALYSES SHALL BE REPORTED TO CSD.

8. ALL GREASE TRAPS/INTERCEPTORS SHALL BE DESIGNED AND INSTALLED TO ALLOW FOR COMPLETE ACCESS FOR INSPECTION, VIEWING (PIPING, BAFFLES AND STRUCTURE WALLS), MAINTENANCE OF THE INNER CHAMBERS AND SAMPLING OF EFFLUENT WASTEWATER DISCHARGED TO THE SEWER.

9. ALL GREASE INTERCEPTORS LARGER THAN 1,500 GALLONS SHALL HAVE THREE ACCESS MANHOLES. MANHOLES SHALL EXTEND TO GRADE, HAVE A MINIMUM SIZE OF 24-INCHES DIAMETER OR SQUARE OPENING, AND SHALL HAVE A GASKET COVER AT GRADE AND BE TRAFFIC RATED WHEN NECESSARY.

10. FOOD SERVICE ESTABLISHMENTS SHALL ADOPT PROCEDURES, WHICH ARE IN COMPLIANCE WITH THE FOG CONTROL PROGRAM FOR HANDLING SOURCES OF FLOATABLE OILS, FAT, AND GREASE ORIGINATING WITHIN THEIR FACILITY. A NOTICE SHALL BE PERMANENTLY POSTED AT A PROMINENT PLACE IN THE FACILITY ADVISING EMPLOYEES OF THE PROCEDURES TO BE FOLLOWED.

11. THE USE OF CHEMICALS, BACTERIA OR OTHER AGENTS TO DISSOLVE GREASE OR OTHERWISE CLEAN GREASE INTERCEPTORS/TRAPS IS SPECIFICALLY PROHIBITED AND WILL BE GROUNDS FOR THE SUSPENSION OR REVOCATION OF THE FOG DISCHARGE PERMIT.

12. WASTEWATER SHALL NOT BE DISCHARGED TO ANY GREASE INTERCEPTOR WITH TEMPERATURES IN EXCESS OF 140° F.

13. WASTEWATER SHALL NOT BE DISCHARGED TO ANY GREASE INTERCEPTOR WITH LESS THAN 750 GALLONS CAPACITY.

14. AUTOMATIC GREASE REMOVAL SYSTEM INSTALLATIONS (EX. BIG DIPPER) SHALL REQUIRE CSD APPROVAL AND WILL BE EVALUATED ON A CASE BY CASE BASIS.

Camarillo Sanitary District
601 Carmen Drive
Camarillo, CA 93010
(805) 388-5340

GREASE INTERCEPTORS

Reviewed: 3/26/2015
Sanitary Superintendent — Date

Approved: 3/31/15
City Engineer — Date

REVISIONS	BY	DATE

STD. PLATE 27

SHT. 1 OF 5

CONSTRUCTION STANDARDS

1. NEW FACILITIES

   A. ALL NEW FOOD SERVICE ESTABLISHMENTS SHALL BE REQUIRED TO INSTALL A GREASE INTERCEPTOR, APPROVED BY CSD. GREASE INTERCEPTORS SHALL BE ADEQUATELY SIZED BASED ON REQUIREMENTS INCLUDED IN THE FOG CONTROL PROGRAM, WITH NO INTERCEPTOR LESS THAN 750 GALLONS CAPACITY UNLESS OTHERWISE APPROVED BY CSD.

   B. NO FOOD SERVICE ESTABLISHMENT WILL BE ALLOWED TO INITIATE OPERATIONS UNTIL A GREASE CONTROL DEVICE IS INSTALLED AND APPROVED BY CSD.

   C. A BASKET, SCREEN, OR OTHER INTERCEPTING DEVICE SHALL BE INSTALLED TO PREVENT PASSAGE OF GREASE TRAP OR INTERCEPTOR EFFLUENT INTO THE COLLECTION SYSTEM OF SOLIDS ONE (1) HALF-INCH OR LARGER IN SIZE. THE BASKET (OR DEVICE) SHALL BE REMOVABLE FOR CLEANING PURPOSES.

   D. GARBAGE GRINDERS ARE PROHIBITED IN FOOD SERVICE ESTABLISHMENTS. SINKS SHALL HAVE SCREENS INSTALLED AND THE SOLIDS PERIODICALLY COLLECTED AND PLACED IN GARBAGE CONTAINERS.

2. EXISTING FACILITIES

   A. ALL EXISTING FOOD SERVICE ESTABLISHMENTS SHALL HAVE GREASE CONTROL DEVICES APPROVED BY CSD. FOOD SERVICE ESTABLISHMENTS WITHOUT A FOG CONTROL DEVICE WILL BE GIVEN A COMPLIANCE DEADLINE NOT TO EXCEED 12 MONTHS FROM DATE OF NOTIFICATION TO HAVE INSTALLED AN APPROVED GREASE CONTROL DEVICE IN COMPLIANCE WITH THESE STANDARDS/REQUIREMENTS. FAILURE TO DO SO WILL BE CONSIDERED A VIOLATION OF CSD OPERATIONS CODE AND MAY SUBJECT THE FACILITY TO PENALTIES AND CORRECTIVE ACTIONS. SAID INSTALLATION SHALL MEET THE SAME REQUIREMENTS FOR DESIGN AS FOR NEW FACILITIES (SEE SECTION II CONSTRUCTION STANDARDS, 1. NEW FACILITIES).

   B. IN THE EVENT AN EXISTING FOOD SERVICE ESTABLISHMENT'S GREASE CONTROL DEVICES ARE EITHER UNDER-DESIGNED OR SUBSTANDARD IN ACCORDANCE WITH THE FOG CONTROL PROGRAM AND THESE STANDARDS, THE OWNER(S) WILL BE NOTIFIED IN WRITING OF THE DEFICIENCIES. THE NOTIFICATION SHALL INCLUDE THE REQUIRED IMPROVEMENTS AND SHALL GIVE A COMPLIANCE DEADLINE NOT TO EXCEED 12 MONTHS TO CONFORM WITH THESE STANDARDS/REQUIREMENTS.

   C. FOR CASES WHERE "OUTDOOR" TYPE GREASE INTERCEPTORS ARE INFEASIBLE TO INSTALL, EXISTING FOOD SERVICE ESTABLISHMENTS MAY APPLY FOR A VARIANCE TO THE DISTRICT MANAGER. IF APPROVED, THE FOOD SERVICE ESTABLISHMENTS MAY BE REQUIRED TO INSTALL ADEQUATE AND APPROVED "INDOOR" GREASE TRAPS FOR USE ON INDIVIDUAL FIXTURES INCLUDING SINKS, AND OTHER POTENTIALLY GREASE-CONTAINING DRAINS. NO DISHWASHER MAY BE CONNECTED TO THESE TYPES OF GREASE TRAPS.

   D. THE SIZE AND USE OF THE "INDOOR" GREASE TRAPS SHALL BE SUBJECT TO CSD APPROVAL, BUT IN NO CASE SHALL BE LESS THAN 50 GALLON LIQUID CAPACITY PER FIXTURE. FLOW CONTROL FITTING/DEVICE MUST BE PROVIDED TO THE INLET SIDE OF THE UNIT.

   E. CSD APPROVAL OF FLOW CONTROL DEVICES MUST BE OBTAINED PRIOR TO INSTALLATION.

   F. THE LOCATION OF "INDOOR" UNITS MUST BE AS NEAR THE SOURCE OF THE WASTEWATER AS PHYSICALLY POSSIBLE.

   G. IN MAINTAINING GREASE TRAPS/INTERCEPTORS, THE OWNER(S) SHALL BE RESPONSIBLE FOR THE PROPER REMOVAL AND DISPOSAL BY APPROPRIATE MEANS OF THE CAPTURED MATERIAL AND SHALL MAINTAIN RECORDS ON-SITE OF THE DATES AND MEANS OF DISPOSAL WHICH ARE SUBJECT TO REVIEW BY CSD (SEE SECTION I. GENERAL SPECIFICATIONS FOR GREASE INTERCEPTORS, 2. FOOD ESTABLISHMENTS, F).

Camarillo Sanitary District
601 Carmen Drive
Camarillo, CA 93010
(805) 388-5340

GREASE INTERCEPTORS

Reviewed: 3/26/2015
Sanitary Superintendent — Date

Approved: 3/31/15
City Engineer — Date

REVISIONS	BY	DATE

STD. PLATE 27

SHT. 2 OF 5

CONSTRUCTION STANDARDS
(CONTINUED)

1. NEW FOOD SERVICE ESTABLISHMENTS IN EXISTING BUILDINGS

   A. NEW FOOD SERVICE ESTABLISHMENTS LOCATED IN EXISTING BUILDINGS WILL BE REQUIRED TO COMPLY WITH THE GREASE INTERCEPTOR STANDARDS APPLICABLE TO NEW FACILITIES (SEE SECTION II. CONSTRUCTION STANDARDS, 1. NEW FACILITIES).

   B. WHERE PHYSICALLY IMPOSSIBLE TO INSTALL "OUTDOOR" GREASE INTERCEPTOR UNITS, "INDOOR" GREASE TRAP UNITS MAY BE ALLOWED AS WITH EXISTING FOOD SERVICE ESTABLISHMENTS PROVIDED PRIOR APPROVAL OF THE UNIT TYPE, SIZE, LOCATION, ETC. IS APPROVED BY CSD (SEE SECTION II. CONSTRUCTION STANDARDS, 2. EXISTING FACILITIES, B–F).

Camarillo Sanitary District
601 Carmen Drive
Camarillo, CA 93010
(805) 388–5340

GREASE INTERCEPTORS

Reviewed: 3/26/2015
Sanitary Superintendent — Date

Approved: 3/31/15
City Engineer — Date

REVISIONS	BY	DATE

STD. PLATE 27

SHT. 3 OF 5

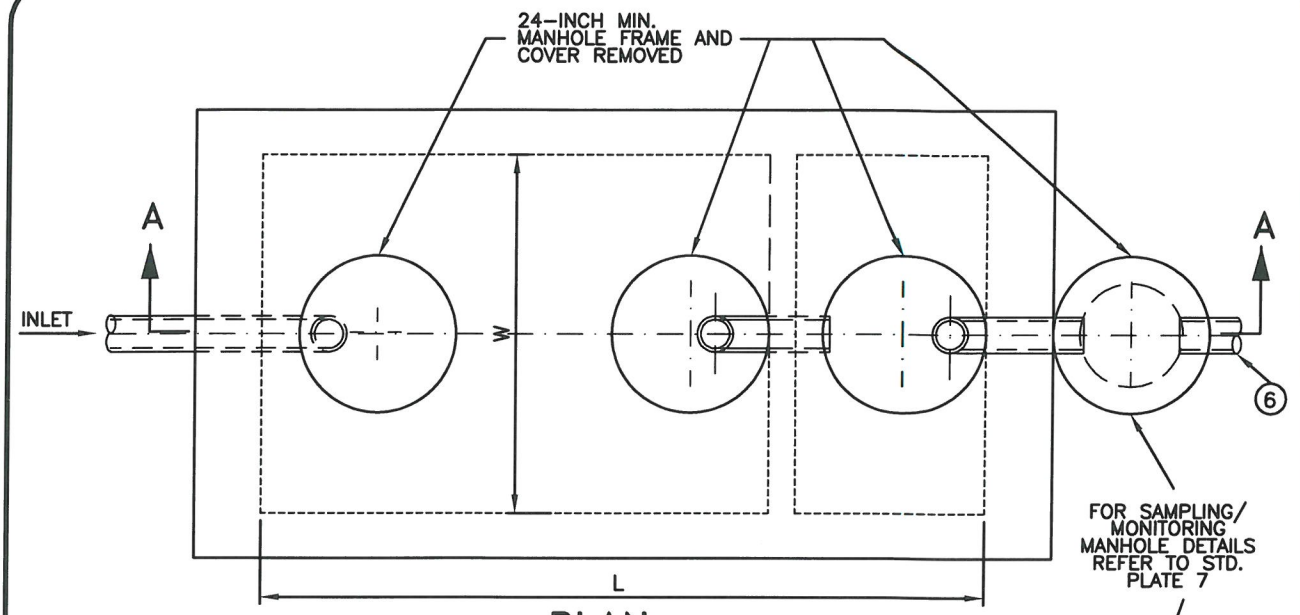

PLAN

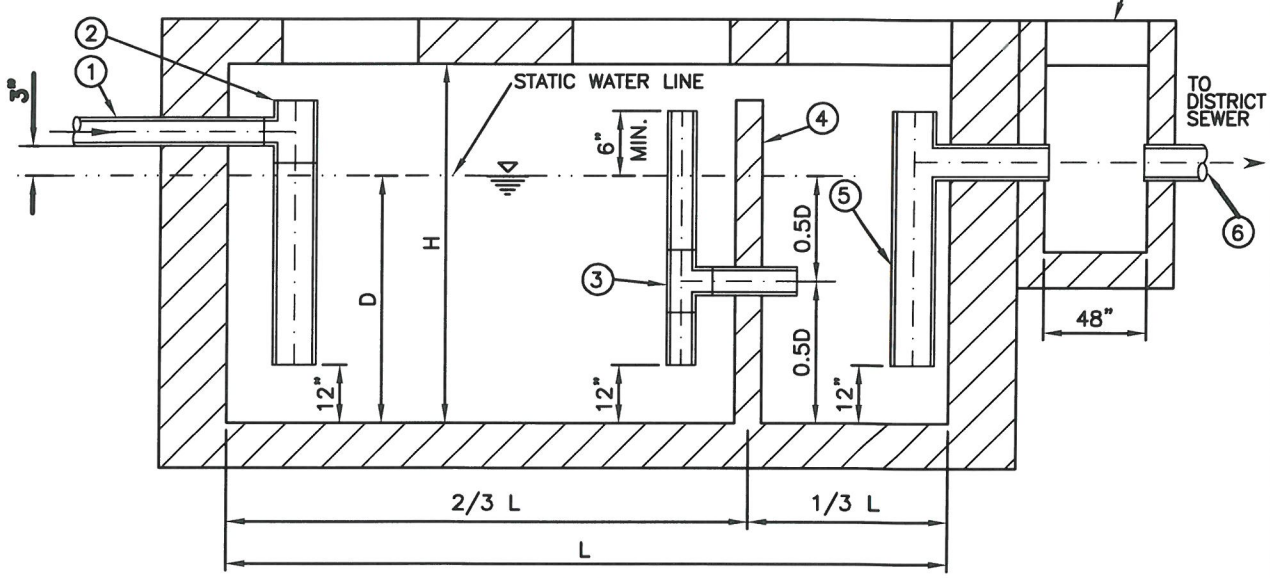

SECTION A–A

1. INLET PIPE PER MANUFACTURER SPECIFICATIONS
2. INFLOW TEE AND STANDPIPE
3. CROSSOVER TEE AND STANDPIPE
4. BAFFLE WALL
5. OUTFLOW TEE AND STANDPIPE
6. OUTLET PIPE–6" MINIMUM

NOTE:

GREASE INTERCEPTOR SHALL BE DESIGNED IN ACCORDANCE WITH THE REQUIREMENTS OF THE CAMARILLO SANITARY DISTRICT FOG CONTROL PROGRAM, SECTION 7–2.

Camarillo Sanitary District
601 Carmen Drive
Camarillo, CA 93010
(805) 388–5340

GREASE INTERCEPTOR TYPE I

Reviewed: 3/26/2015
Sanitary Superintendent — Date

Approved: Mustafa Tinaker 3/31/15
City Engineer — Date

REVISIONS	BY	DATE

STD. PLATE 27

SHT. 4 OF 5

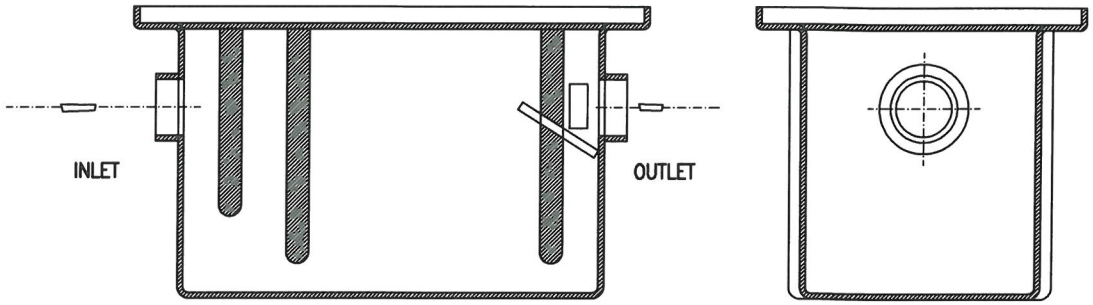

TYPE II

NOTE:

TYPE II INDOOR GREASE INTERCEPTORS SHALL BE AS MANUFACTURED BY ZURN MODEL GT2702 OR EQUAL AND AS APPROVED BY THE CAMARILLO SANITARY DISTRICT.

Camarillo Sanitary District
601 Carmen Drive
Camarillo, CA 93010
(805) 388-5340

INDOOR GREASE INTERCEPTOR TYPE II

Reviewed: 3/26/2015
Sanitary Superintendent — Date

Approved: 3/31/15
City Engineer — Date

REVISIONS	BY	DATE

STD. PLATE 27

SHT. 5 OF 5

NOTES:

RECREATIONAL VEHICLE SANITARY DUMP AS MANUFACTURED BY ZURN Z920 (EXCLUDE FLUSH VALVE). ANY SUBSTITUTES SHALL BE APPROVED BY THE CITY ENGINEER.

1. WASTE RECEPTACLE DRAIN, FABRICATED STEEL, ACID RESISTANT EPOXY COATED, WITH HINGED COVER/FOOT PEDAL, 4-INCH IP THREAD OUTLET (ZURN Z921).
2. ENCLOSED RETRACTABLE HOSE REEL WITH 35-FEET OF ⅜-INCH RUBBER HOSE UNIT SHALL BE FURNISHED WITH A HOSE BUMPER, A HOSE GUARD AND A SELF CLOSING 1.6 GPM PRE-RINSE VALVE WITH AN INSULATED HANDLE AND A PROTECTIVE BUMPER SPRAY HEAD.
3. CONCRETE PAD 5-FEET x 8-FEET (520-C-2500) WITH #4 REBAR AT 12-INCHES ON CENTER EACH WAY. PAD SHALL SLOPE TOWARD DRAIN AT ¼-INCH PER FOOT OR 1-INCH TOTAL WHICH EVER IS GREATER. ALL ADJACENT SURFACES SHALL SLOPE AWAY FROM DRAINAGE PAD.
4. INSTALL AN APPROVED REDUCED PRESSURE PRINCIPAL BACKFLOW ASSEMBLY, PER CITY OF CAMARILLO WATER DIVISION STANDARD SPECIFICATION DRAWINGS.
5. POWDER COATED STEEL BACKFLOW DEVICE CAGE (TYPICAL). PER CITY OF CAMARILLO WATER DIVISION STANDARD SPECIFICATION DWG. DRAWINGS.
6. STANDARD CONTAINMENT BERM (3-INCHES HIGH x 8-INCHES WIDE).
7. THE SANITARY DUMP STATION MUST BE LOCATED AT LEAST 100-FEET FROM ANY WATER SUPPLY WELL.
8. A SIGN MUST BE POSTED AT THE SANITARY DUMP STATION STATING THAT THE ADJACENT WATER SUPPLY IS "UNSAFE FOR DRINKING".
9. WATER AT THE DUMP STATION DRAIN MUST DISCHARGE TO AN APPROVED WASTEWATER DISPOSAL SYSTEM.
10. PLANS SHALL BE SUBMITTED TO THE CAMARILLO SANITARY DISTRICT FOR REVIEW AND APPROVAL PRIOR TO THE CONSTRUCTION.
11. DUMP STATION SHALL HAVE A FIXED ROOF.

Camarillo Sanitary District
601 Carmen Drive
Camarillo, CA 93010
(805) 388-5340

R.V. DUMP STATION

Reviewed: 3/26/2015
Sanitary Superintendent — Date

Approved: 3/31/15
City Engineer — Date

REVISIONS	BY	DATE

STD. PLATE 28

SHT. 1 OF 2

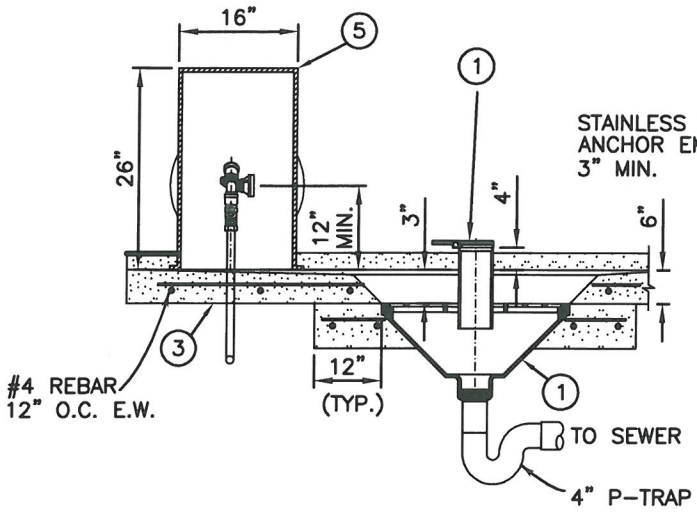

SECTION-A

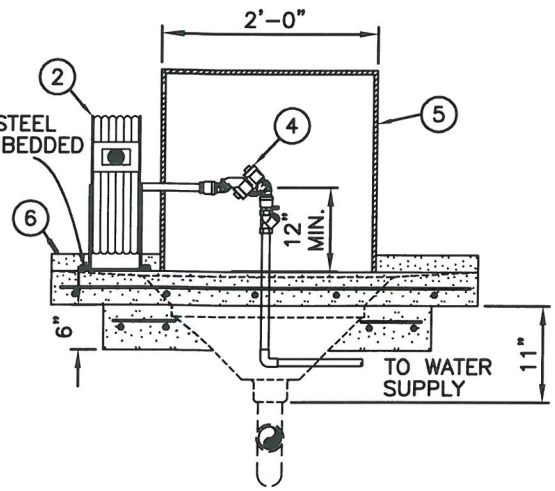

SECTION-B

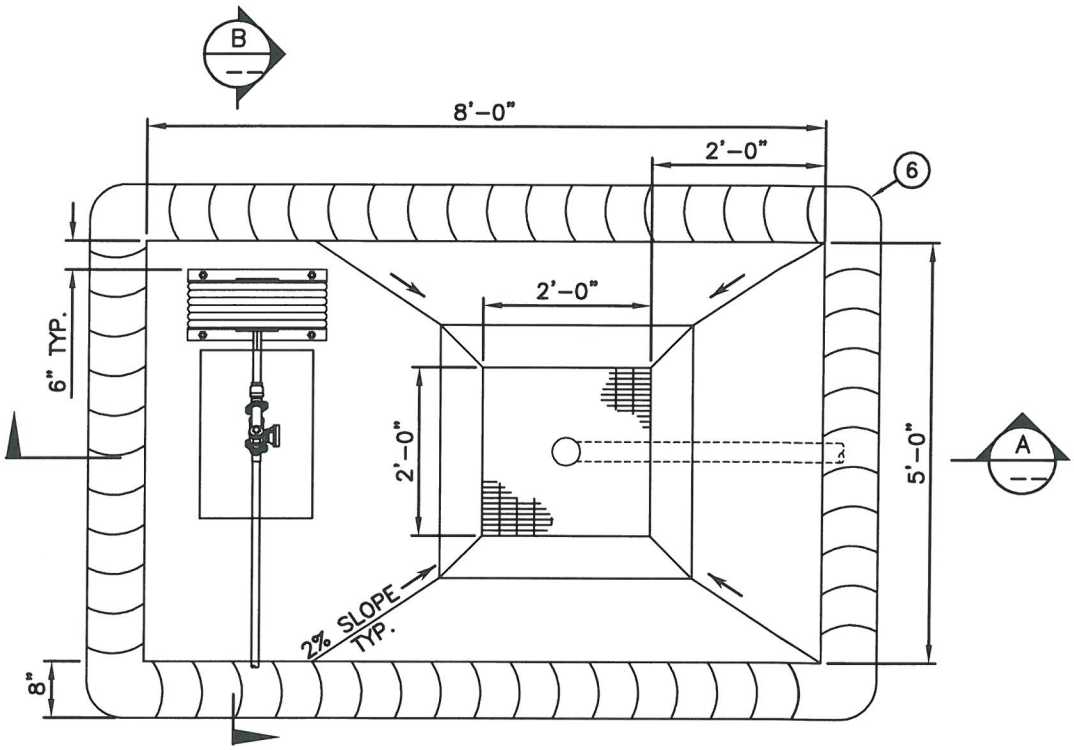

PLAN

Camarillo Sanitary District
601 Carmen Drive
Camarillo, CA 93010
(805) 388-5340

R.V. DUMP STATION

Reviewed: 3/26/2015
Sanitary Superintendent — Date

Approved: 3/31/15
City Engineer — Date

REVISIONS	BY	DATE

STD. PLATE 28

SHT. 2 OF 2

RESIDENTIAL SANITARY LIFT STATION

THE PURPOSE OF THIS SPECIFICATION IS TO ESTABLISH A MINIMUM LEVEL OF EQUIPMENT QUALITY, SIZING, TYPE AND/OR MATERIAL. IT IS NOT THE INTENT TO RESTRICT THE LIST OF MANUFACTURERS, BUT RATHER TO DEFINE THE GENERAL PRODUCT TO BE FURNISHED.

GENERAL EQUIPMENT STIPULATIONS

ALL MATERIALS AND EQUIPMENT SHALL BE NEW AND OF A QUALITY EQUAL TO THAT HAS BEEN SPECIFIED AND APPROVED BY CAMARILLO SANITARY DISTRICT. BASIN, PUMP, MOTOR, AND ELECTRICAL CONTROLS SHALL BE FURNISHED BY SUPPLIERS REGULARLY ENGAGED IN SUPPLYING THE REQUIRED EQUIPMENT (MINIMUM THREE (3) YEARS). EQUIPMENT SHALL BE READILY ADAPTABLE FOR INSTALLATION AND OPERATION IN THE STRUCTURES AS SHOWN ON THE PLANS, AND ANY ALTERATION OF PLANNED STRUCTURE TO ACCOMMODATE OTHER TYPES OF EQUIPMENT SHALL BE THE RESPONSIBILITY OF THE CONTRACTOR AND APPROVED BY THE CITY ENGINEER PRIOR TO THE ORDERING OF SUBSTITUTED EQUIPMENT. THE CONTRACTOR SHALL GUARANTEE TO THE OWNER ALL EQUIPMENT AGAINST FAULTY OR INADEQUATE DESIGN, IMPROPER ASSEMBLY OR ERECTION, DEFECTIVE WORKMANSHIP OR MATERIALS, LEAKAGE, BREAKAGE, OR OTHER FAILURES FOR A PERIOD OF THREE (3) YEARS AFTER ACCEPTANCE.

SYSTEM

THE RESIDENTIAL SANITARY LIFT STATION SHALL BE A PRE-ASSEMBLED DUPLEX SEWAGE SYSTEM, AS MANUFACTURED BY LIBERTY PUMPS, BERGEN, N.Y., 1100 SERIES, OR EQUAL. THE SYSTEM SHALL BE FACTORY PRE-ASSEMBLED WITH PUMPS, DISCHARGE PIPE NIPPLES, AND FLOAT PRE-MOUNTED IN THE BASIN. VOLUME PER PUMP CYCLE SHALL BE FACTORY SET AS APPROVED BY CAMARILLO SANITARY DISTRICT. FLOATS SHALL BE TETHERED TO A REMOVABLE STANDPIPE/ACCESS COVER ASSEMBLY.

PUMP CONSTRUCTION

THE CASTINGS SHALL BE CONSTRUCTED OF CLASS 25 CAST IRON. THE MOTOR HOUSING SHALL BE OIL FILLED TO DISSIPATE HEAT. AIR FILLED MOTORS SHALL NOT BE CONSIDERED EQUAL SINCE THEY DO NOT PROPERLY DISSIPATE HEAT FROM THE MOTOR. ALL MATING PARTS SHALL BE MACHINED AND SEALED WITH A BUNA-N O-RING. ALL FASTENERS EXPOSED TO THE LIQUID SHALL BE STAINLESS STEEL. THE MOTOR SHALL BE PROTECTED ON THE TOP SIDE WITH SEALED CORD ENTRY PLATE WITH MOLDED PINS TO CONDUCT ELECTRICITY ELIMINATING THE ABILITY OF WATER TO ENTER INTERNALLY THROUGH THE CORD. THE MOTOR SHALL BE PROTECTED ON THE LOWER SIDE WITH A UNITIZED CERAMIC/CARBON SEAL WITH STAINLESS STEEL HOUSINGS AND SPRING. THE SECOND/MAIN SEAL SHALL BE A UNITIZED HARD FACE SILICON CARBIDE SEAL WITH STAINLESS STEEL HOUSINGS AND SPRING. THE UPPER AND LOWER BEARING SHALL BE CAPABLE OF HANDLING ALL RADIAL THRUST LOADS. THE PUMP SHALL BE FURNISHED WITH STAINLESS STEEL HANDLE.

ELECTRICAL POWER CORD

THE SUBMERSIBLE PUMP SHALL BE SUPPLIED WITH SUFFICIENT LENGTH OF MULTICONDUCTOR POWER CORD TO CONNECT SAFELY TO THE PLUG AT THE PROPERTY. IT SHALL BE CORD TYPE SJOOW (1-PH) OR SEOOW (3-PH), CAPABLE OF CONTINUED EXPOSURE TO THE PUMPED LIQUID. THE POWER CORD SHALL BE SIZED FOR THE RATED FULL LOAD AMPS OF THE PUMP IN ACCORDANCE WITH THE NATIONAL ELECTRIC CODE. THE POWER CABLE SHALL NOT ENTER THE MOTOR HOUSING DIRECTLY BUT WILL CONDUCT ELECTRICITY TO THE MOTOR BY MEANS OF A WATER-TIGHT COMPRESSION FITTING CORD PLATE ASSEMBLY, WITH MOLDED PINS TO CONDUCT ELECTRICITY. THIS WILL ELIMINATE THE ABILITY OF WATER TO ENTER INTERNALLY THROUGH THE CORD BY MEANS OF A DAMAGED OR WICKING CORD.

Camarillo Sanitary District
601 Carmen Drive
Camarillo, CA 93010
(805) 388-5340

RESIDENTIAL SANITARY LIFT STATION

Reviewed: 3/26/2015
Sanitary Superintendent — Date

Approved: 3/31/15
City Engineer — Date

REVISIONS	BY	DATE

STD. PLATE 29

SHT. 1 OF 4

RESIDENTIAL SANITARY LIFT STATION
(CONTINUED)

MOTORS

AS APPROVED BY CAMARILLO SANITARY DISTRICT, ALL SINGLE PHASE MOTORS SHALL BE OIL FILLED, PERMANENT SPLIT CAPACITOR, CLASS B INSULATED NEMA B DESIGN, RATED FOR CONTINUOUS DUTY. THREE PHASE MOTORS SHALL BE POLYPHASE. AT MAXIMUM LOAD THE WINDING TEMPERATURE SHALL NOT EXCEED 266° F UNSUBMERGED. SINCE AIR FILLED MOTORS ARE NOT CAPABLE OF DISSIPATING HEAT, THEY SHALL NOT BE CONSIDERED EQUAL. SINGLE PHASE PUMP MOTORS SHALL HAVE AN INTEGRAL THERMAL OVERLOAD SWITCH IN THE WINDINGS FOR PROTECTING THE MOTOR. THREE PHASE MOTORS SHALL BE USED WITH AN APPROPRIATE CONTROLLER WITH INTEGRAL OVERLOAD PROTECTION. THE CAPACITOR CIRCUIT SHALL BE MOUNTED INTERNALLY IN THE PUMP ON SINGLE PHASE UNITS.

BEARINGS AND SHAFT

UPPER AND LOWER BALL BEARINGS SHALL BE REQUIRED. THE BEARINGS SHALL BE A SINGLE BALL/RACE-TYPE BEARING. BOTH BEARINGS SHALL BE PERMANENTLY LUBRICATED BY THE OIL, WHICH FILLS THE MOTOR HOUSING. THE MOTOR SHAFT SHALL BE MADE OF 300 OR 400 SERIES STAINLESS STEEL AND HAVE A MINIMUM DIAMETER OF 0.625-INCH.

SEALS

THE PUMP SHALL HAVE A UNITIZED CARBON/CERAMIC SEAL WITH STAINLESS STEEL HOUSINGS AND SPRING EQUAL TO CRANE TYPE 6A. THE MOTOR PLATE/HOUSING INTERFACE SHALL BE SEALED WITH A BUNA-N O-RING.

BASIN

THE BASIN SHALL BE CONSTRUCTED OF HEAVY DUTY ROTATIONALLY MOLDED POLYETHYLENE. DIMENSIONS SHALL BE AS APPROVED BY CAMARILLO SANITARY DISTRICT. THE INLET HUB SHALL BE 4-INCH AND PRE-ASSEMBLED TO BASIN. THE BASIN SHALL HAVE "TORQUE-STOPS" TO LOCATE AND RETAIN THE PUMP IN ITS PROPER POSITION.

COVER

THE COVER SHALL BE "HEAVY DUTY" ¼-INCH STEEL PLATE, ENAMEL-COATED ON BOTH SIDES. THE COVER SHALL HAVE 3-INCH DISCHARGES AND VENT FLANGE. THE COVER SHALL BE FITTED WITH TWO (2) 16-INCH DIAMETER PUMP OPENINGS, AND ONE (1) 10-INCH DIAMETER INSPECTION COVER WITH INTEGRAL STAND PIPE FOR FLOAT TETHERING. ALL COVER HARDWARE SHALL BE STAINLESS STEEL.

PUMP

SEE SPECIFIC LE-SERIES LITERATURE FOR PUMP PERFORMANCE AND TECHNICAL SPECIFICATIONS. THE PUMP SHALL BE CAPABLE OF HANDLING AT LEAST 2-INCH SOLIDS, A MAXIMUM LIQUID TEMPERATURE OF 230° F, AND MAXIMUM STATOR TEMPERATURE OF 266° F. THE VOLUTE SHALL BE CLASS 25 CAST IRON AND POWDER COATED. THE SHAFT AND HARDWARE SHALL BE STAINLESS STEEL. O-RINGS SHALL BE BUNA-N AND MECHANICAL SEALS SHALL BE UNITIZED CERAMIC CARBON. BEARINGS SHALL HAVE A MINIMUM BEARING LIFE OF 50,000 HOURS.

IMPELLER

THE IMPELLER SHALL BE A CLASS 25 IRON, WITH PUMP OUT VANES ON THE BACK SHROUD TO KEEP DEBRIS AWAY FROM THE SEAL AREA. IT SHALL BE THREADED TO THE MOTOR SHAFT.

Camarillo Sanitary District
601 Carmen Drive
Camarillo, CA 93010
(805) 388-5340

RESIDENTIAL SANITARY LIFT STATION

Reviewed: [signature] 3/26/2015
Sanitary Superintendent Date

Approved: Neffalia Tucker 3/31/15
City Engineer Date

REVISIONS	BY	DATE

STD. PLATE 29

SHT. 2 OF 4

RESIDENTIAL SANITARY LIFT STATION
(CONTINUED)

DUPLEX CONTROL SYSTEM

ALL SINGLE PHASE UNITS SHALL BE SUPPLIED WITH UL APPROVED AUTOMATIC WIDE ANGLE TILT FLOAT SWITCHES. THE SWITCHES SHALL BE EQUIPPED WITH PIGGY BACK STYLE PLUG THAT ALLOWS THE PUMP TO BE OPERATED MANUALLY WITHOUT THE REMOVAL OF THE PUMP IN THE EVENT THAT A SWITCH BECOMES INOPERABLE. AUTOMATIC PUMPS SHALL BE OPERABLE BY MEANS OF A PUMP CONTROL PANEL. PANEL SHALL BE NEMA 4 ENCLOSURE FOR OUTDOOR INSTALLATION AND NEMA 1 ENCLOSURE FOR INDOOR INSTALLATION. CONSULT MANUFACTURER FOR PROPER COMPONENTS AND PANEL SELECTION.

PAINT

THE EXTERIOR OF THE CASTING SHALL BE PROTECTED WITH MINIMUM 12 MIL POWDER COAT PAINT.

SUPPORT

THE PUMP SHALL HAVE CAST IRON SUPPORT LEGS, ENABLING IT TO BE A FREE STANDING UNIT. THE LEGS WILL BE HIGH ENOUGH TO ALLOW 2-INCH SOLIDS TO ENTER THE VOLUTE.

SERVICEABILITY

PUMP MANUFACTURER SHALL GUARANTEE THAT COMPONENTS REQUIRED FOR THE REPAIR OF THE PUMP SHALL BE SHIPPED WITHIN A PERIOD OF 24 HOURS.

DISCHARGE PIPING

DISCHARGE PIPING (FORCE MAIN) SHALL BE MINIMUM 3-INCH DIAMETER, SCHEDULE 40 PVC. FORCE MAIN SHALL TERMINATE INTO A MANHOLE OR CAMARILLO SANITARY DISTRICT APPROVED STRUCTURE WITH A SMOOTH TRANSITION TO A GRAVITY SEWER.

VALVES

A CAMARILLO SANITARY DISTRICT APPROVED CHECK VALVE AND ISOLATION VALVE SHALL BE INSTALLED DOWN STREAM OF THE PUMPS AND OUTSIDE OF PUMP BASIN.

TESTING

AS APPROVED BY CAMARILLO SANITARY DISTRICT, THE PUMP SHALL HAVE A GROUND CONTINUITY CHECK AND THE MOTOR CHAMBER SHALL BE HI-POTTED TO TEST FOR ELECTRICAL INTEGRITY, MOISTURE CONTENT AND INSULATION DEFECTS. THE MOTOR AND VOLUTE HOUSING SHALL BE PRESSURIZED, AND AN AIR LEAK DECAY TEST SHALL BE PERFORMED TO ENSURE INTEGRITY OF THE MOTOR HOUSING. THE PUMP SHALL BE RUN, VOLTAGE CURRENT MONITORED, AND THE TESTER SHALL CHECK FOR NOISE OR OTHER MALFUNCTION.

QUALITY CONTROL

THE PUMP SHALL BE MANUFACTURED IN ISO 9001 CERTIFIED FACILITY.

WARRANTY

STANDARD WARRANTY SHALL BE THREE (3) YEARS.

Camarillo Sanitary District
601 Carmen Drive
Camarillo, CA 93010
(805) 388-5340

RESIDENTIAL SANITARY LIFT STATION

Reviewed: 3/26/2015
Sanitary Superintendent — Date

Approved: Mathalie Tucker 3/31/15
City Engineer — Date

REVISIONS	BY	DATE

STD. PLATE 29

SHT. 3 OF 4

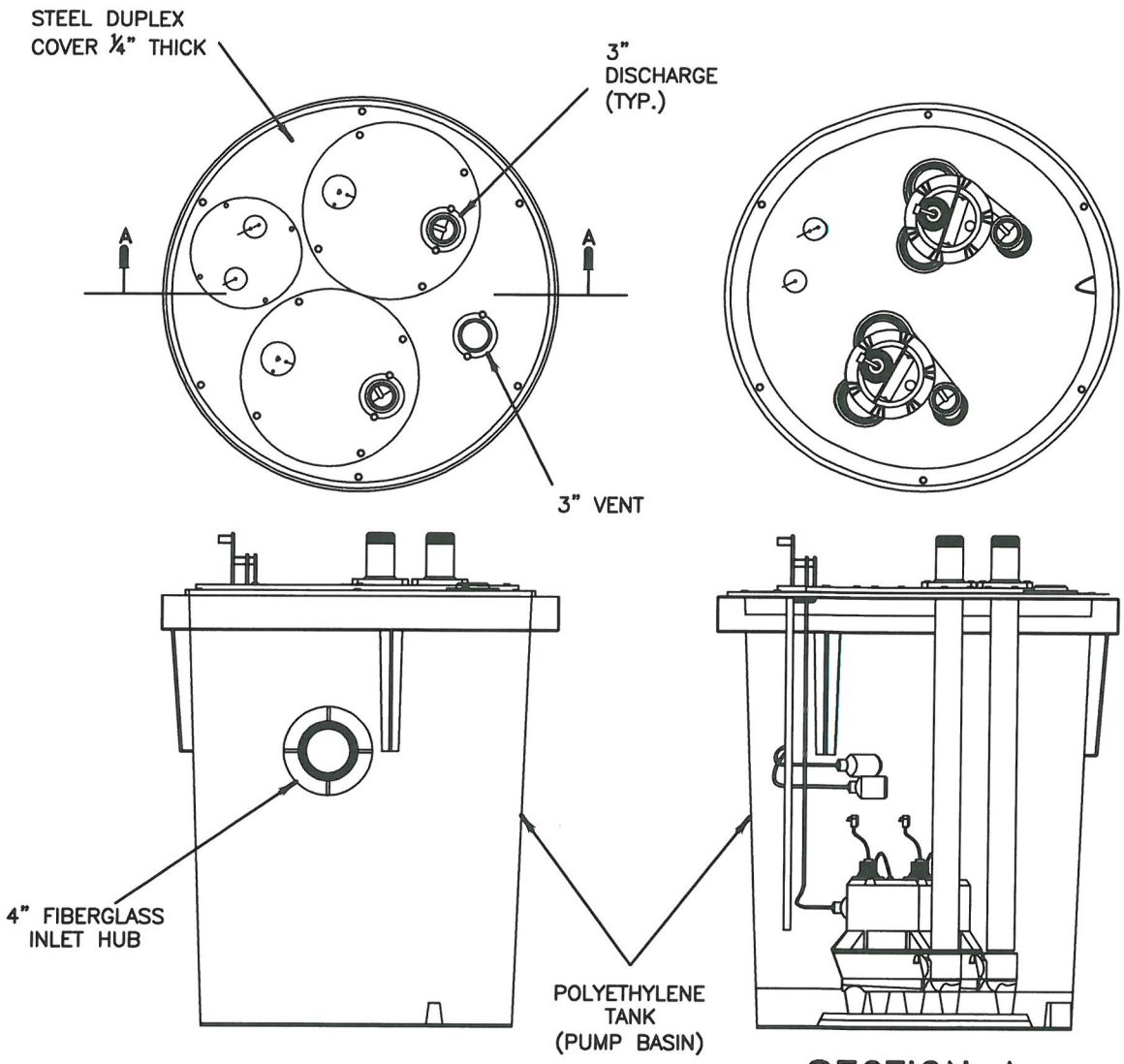

SECTION A

NOTE:

BEDDING AND BACKFILL PER CITY OF CAMARILLO STANDARDS.

Camarillo Sanitary District
601 Carmen Drive
Camarillo, CA 93010
(805) 388-5340

RESIDENTIAL SANITARY LIFT STATION

Reviewed: 3/26/2015
Sanitary Superintendent — Date

Approved: Matthew Tucker 3/31/15
City Engineer — Date

REVISIONS	BY	DATE

STD. PLATE 29

SHT. 4 OF 4