ID	Task Name	Start	Finish
1	Groundwater Study	Tue 5/10/11	Mon 3/30/15
2	Grant Agreement	Tue 10/1/13	Sat 7/30/16
3	Fox Canyon GMA Permit Phase 1	Mon 1/28/13	Thu 4/30/15
4	Fox Canyoun GMA Permit - Phase 2	Mon 3/24/14	Sun 2/28/16
5	RWQCB - NPDES Dewatering Permit	Fri 1/1/16	Thu 6/30/16
6	SWRCB - NPDES Construction Permit	Sun 3/13/16	Wed 5/25/16
7	CDPH - Amend Permit	Fri 12/30/16	Fri 12/30/16
8	CMWD - Brine Connection Permit	Fri 11/4/16	Thu 7/13/17
9	Prop. 84 Grant Application Prep	Tue 10/23/12	Fri 3/29/13
10	Prop. 84 Application Review Period	Mon 4/1/13	Thu 12/5/13
11	Prop. 84 - Results	Thu 12/5/13	Thu 12/5/13
12	Prop. 84 - Agreement Period	Fri 1/3/14	Tue 6/30/15
13	Prop. 84 - Grand Acceptance	Tue 11/11/14	Sat 7/30/16
14	CEQA - Consultant	Tue 7/30/13	Mon 12/30/13
15	CEQA - Draft EIR	Tue 4/1/14	Mon 5/19/14
16	CEQA - Recirculated DEIR (Water)	Sun 3/1/15	Mon 4/20/15
17	CEQA - Final EIR	Mon 4/20/15	Wed 5/13/15
18	CEQA - City Council Approval (FEIR)	Wed 5/13/15	Wed 5/13/15
19	CEQA - Amendment EIR Preparation	Thu 10/15/15	Thu 12/10/15
20	CEQA - Amendment EIR 45-day public review	Fri 12/11/15	Wed 1/27/16
21	CEQA - Amendment Final EIR	Mon 2/1/16	Wed 2/10/16
22	CEQA - City Council Approval (Amended FEIR)	Wed 2/10/16	Wed 2/10/16
23	Property Purchase	Tue 7/1/14	Thu 6/30/16
24	Project Management Team - Selection	Wed 11/4/15	Wed 1/27/16
25	Project Management Team in Place	Thu 1/28/16	Tue 6/26/18
26	Major Equipment Selection/Prepurchase	Thu 4/28/16	Wed 6/29/16
27	Engineering Design Selection - Treatment Facil	Thu 1/28/16	Wed 3/9/16
28	Engineering Design Award - Treatment Facility*	Wed 3/9/16	Wed 3/9/16
29	Construction Management - Selection	Tue 3/1/16	Tue 4/12/16
30	Construction Management Award	Wed 4/13/16	Wed 4/13/16
31	Design 30%	Fri 3/11/16	Thu 6/30/16
32	Design - Pipelines	Fri 3/11/16	Mon 8/1/16
33	Design - 2 new wells	Thu 3/10/16	Sat 7/30/16
34	Project Management Plan - Grant Req'd	Tue 1/6/15	Thu 5/17/18
35	Design/Build Contract Development	Tue 3/15/16	Wed 6/29/16
36	Design/Build Contractor Pre-Qualification	Sun 5/1/16	Tue 6/21/16
37	Financing (Bond Processing)	Fri 7/1/16	Tue 8/30/16
38	Design/Build - Bid Solicitation	Thu 6/23/16	Mon 8/15/16
39	Design/Build - Bid Award	Wed 8/24/16	Wed 8/24/16
40	Construction Bid - Pipeleine	Thu 8/25/16	Thu 9/15/16
41	Construction Award - Pipeline	Wed 9/21/16	Wed 9/21/16
42	Construction Bid - Wells	Thu 8/25/16	Thu 9/15/16
43	Construction Award - Wells	Wed 9/21/16	Wed 9/21/16
44	Design/Build - Design 100% Treatment Facility	Tue 8/23/16	Sun 10/30/16
45	Construction Administration	Tue 8/30/16	Mon 1/29/18
46	Design/Build - Construction	Thu 9/1/16	Sat 12/30/17
47	Calleguas Brine Completion @ Upland/Lewis	Fri 1/15/16	Fri 1/15/16
48	Connection to Calleguas Brine Line	Fri 9/30/16	Sun 10/15/17
49	Design/Build - Operation	Wed 11/1/17	Tue 5/15/18

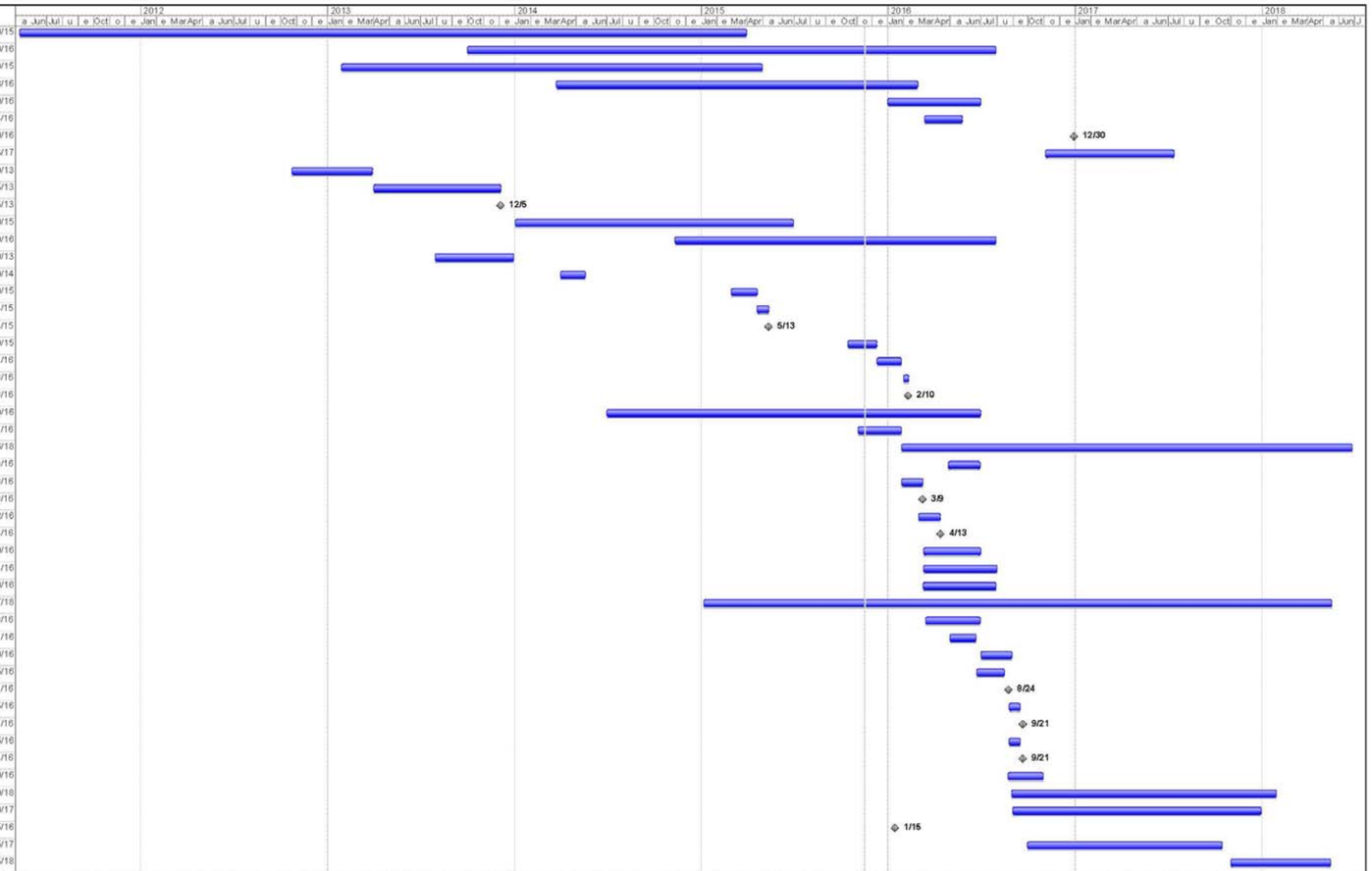

Project: Camarillo_Schedule
Date: Mon 11/16/15

Task | Progress | Summary | External Tasks | Deadline
Split | Milestone | Project Summary | External Milestone

Page 1

Figure 9-1: NPV Groundwater Desalter Schedule

INTENTIONALLY LEFT BLANK

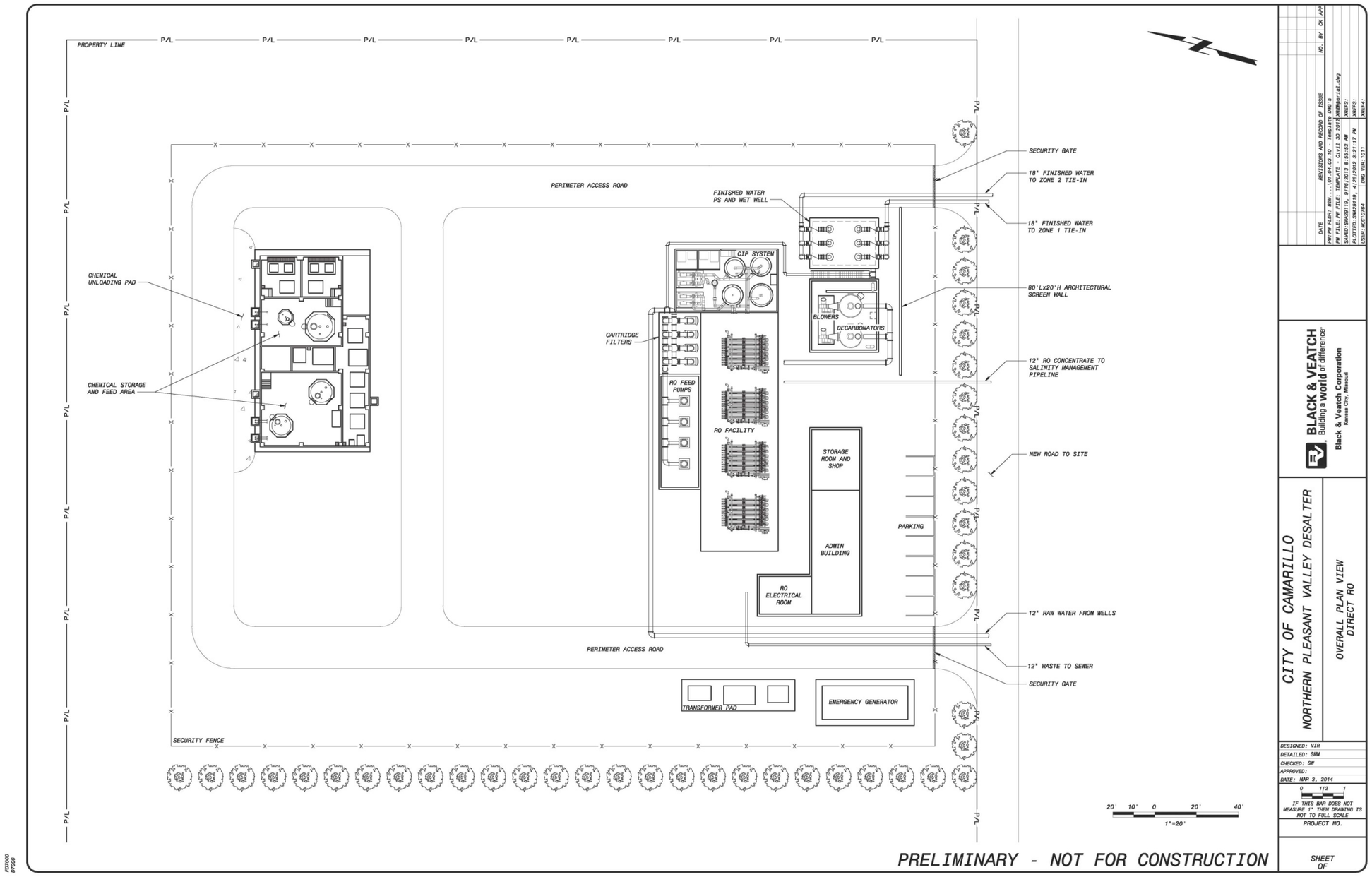

Figure 5-6: Site Layout for the NPV Groundwater Treatment Facility (Pretreatment Option 1 – Direct RO)

INTENTIONALLY LEFT BLANK

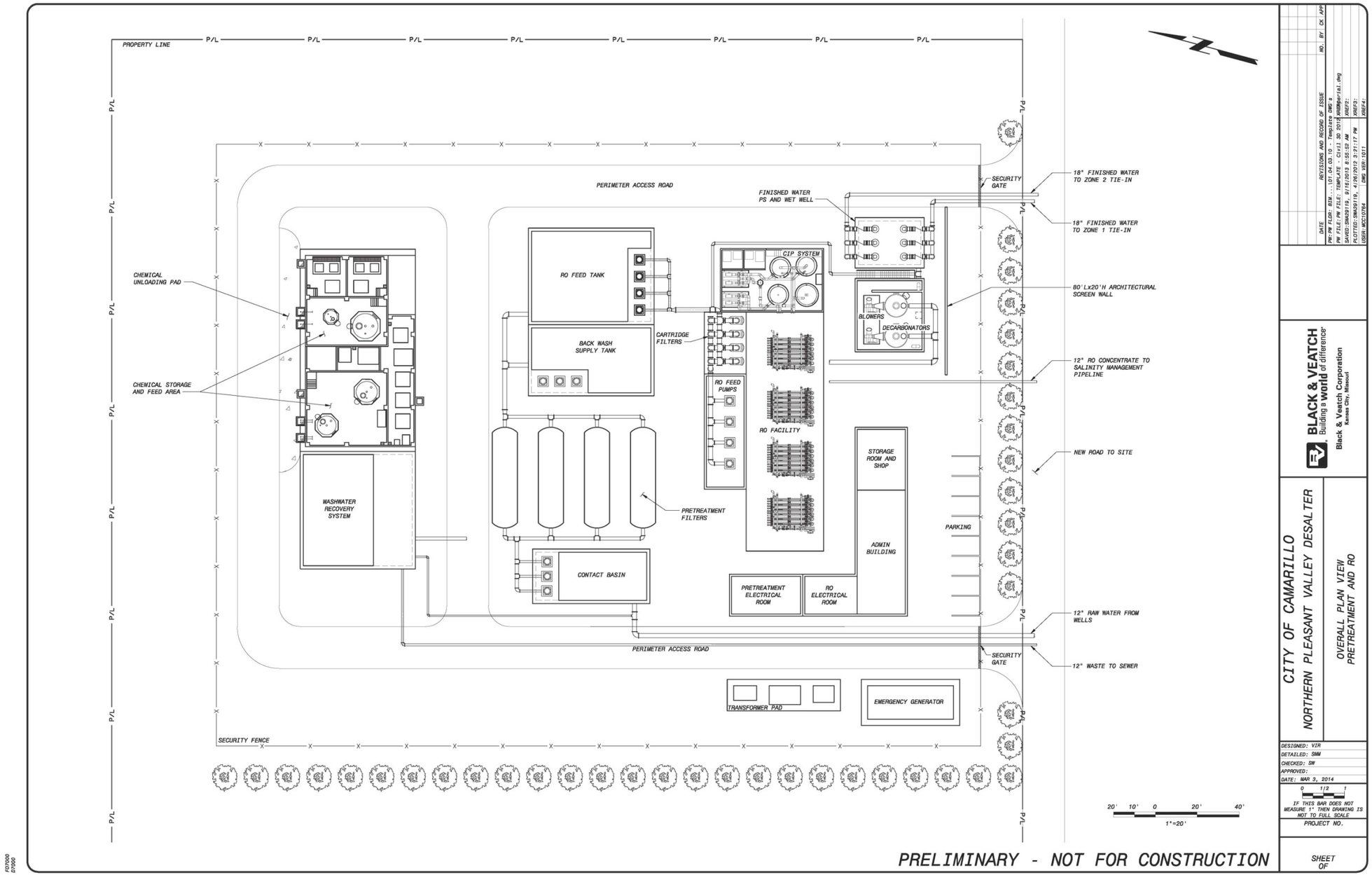

Figure 5-7: Site Layout for the NPV Groundwater Treatment Facility (Pretreatment Option 2 – Pretreatment Filtration + RO)

INTENTIONALLY LEFT BLANK

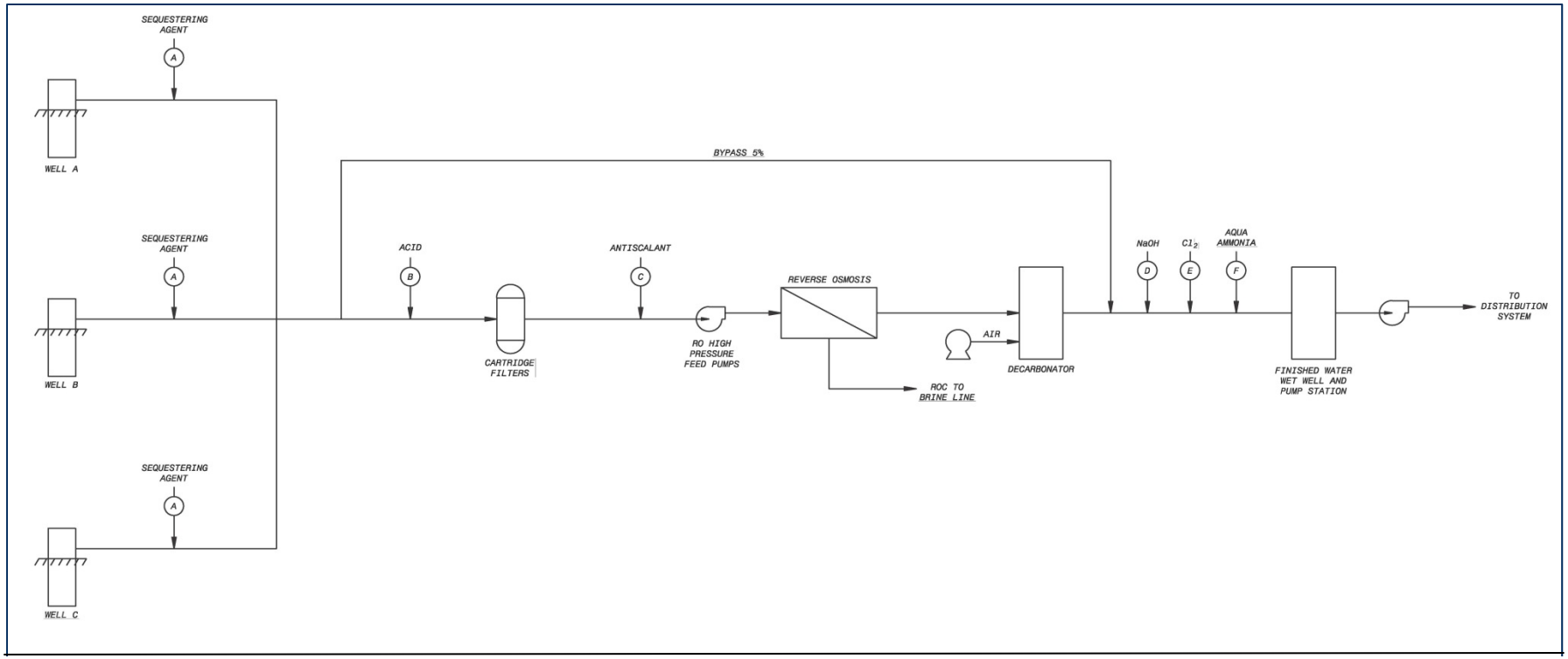

Figure 5-4: Process Flow Diagram for Pretreatment Option 1 (Oxygen Quenching for Direct RO)

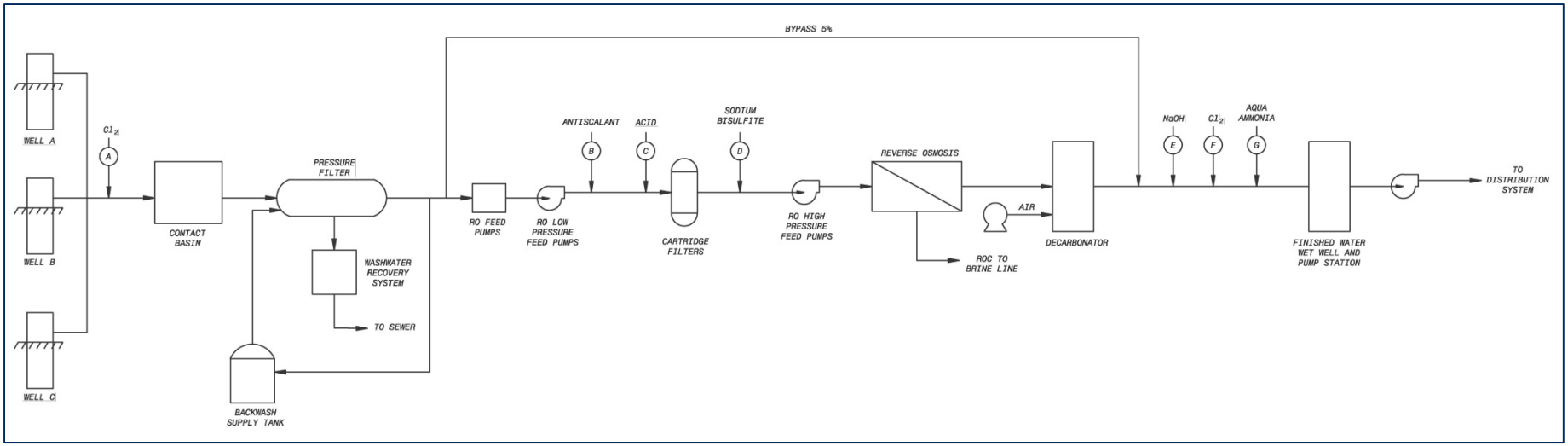

Figure 5-5: Process Flow Diagram for Pretreatment Option 2 (Chlorine + Pretreatment Filtration)